Manual Instructions

J3500 standard

Control system for
technical faults
with
text display screen

The J3500 is an automatic processing system for detecting technical faults, including all the necessary functions for local and remote indication. It is designed to adapt easily to any scenario. Several additional functions have been added to those found on the J3000 for remote control and automation. It is possible to adjust the brightness.
Equipped with a multilingual text display screen (3 possible languages) parameters can be defined channel by channel and a display of the histories of alarms.

CONTENTS

FUNCTIONS

DESIGN

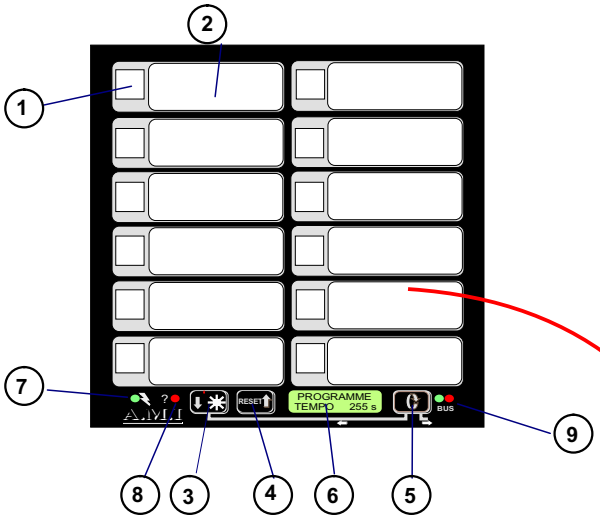

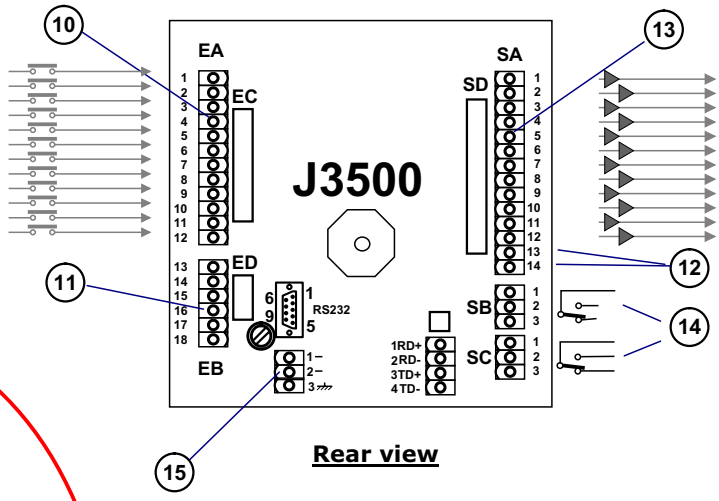

Rear view

1 - 12 plugged leds, 10x10mm, high light intensity Colour change possible (Red in standard, Yellow, Green, Blue). Different types of blinking, depending on the sequence used.

2 - Wide lable with 4 lines of text possible

3 "Test" / "Next" + light intensity adjustement key

4 - "Reset" / "Previous" key

5 - Programme / History key

6 - text display with 2 lines of 16 characters: History, Alarms / Programme
7 - Supply indicator
8 - "System alarm" / BUS alarm / supply level alarmindicator
9 - BUS communication transmission / reception indicators
10 - 12 "Input" terminals
11 - 6 "Additional input" terminals: +COM, TEST, Horn relay STOP (AR KL) + Blinking STOP (AR CL) + CLEAR (EFF) + LOCKING
12 - 2 terminals: "1st fault" and Sync"
13 - 12 "open collector" type "Output" terminals
14 - 6 changeover relay output terminals by dry contact: "horn relay" and "general alarm" relay
15 - 2 "Supply" terminals

A back-lit text display screen of 2 lines of 16 characters makes parameter settings easy using the front panel keys.

LANGUAGES: The menu dialogue can be selected in English, French or Spanish.

HISTORY: In normal working, the display screen allows you to display the last 64 events. It indicates the channel concerned as well as the type. This information is numbered and classified in chronological order of arrival. It is possible to clear the history.

Light intensity adjustement : For specific cases (e.g. Navy). It is possible to adjust the intensity of the front and screen leds. This control can be transferred to several panels.

Front panel buttons

"Test" or "decrease" key: for general led test. In programming mode, this makes it possible to decrement to value below. It has the same function as the rear "test led" terminal.

"Reset" or "increase" key: releases an alarm. It groups together the rear terminal functions "horn relay" (AR KL) and "Blinking Stop" (AR CL), and "Clear" (EFF). Pressing once stops the audible alarm, pressing twice puts the light to fixed (release). The light will go off on return to normal. These functions can differ according to the settings. In **programming mode**, they increase to the value above.

"Prog" key: press key for about 2 seconds displays the history (which can be scrolled down using the "test led" and "reset" keys). Pressing for 10 seconds sets off the programming mode. In "history" mode, a short press will return to "normal working".

+ The "prog" and "test" keys can be used together in "programming" mode for comme back to the before step.

GENERAL PRINCIPLE

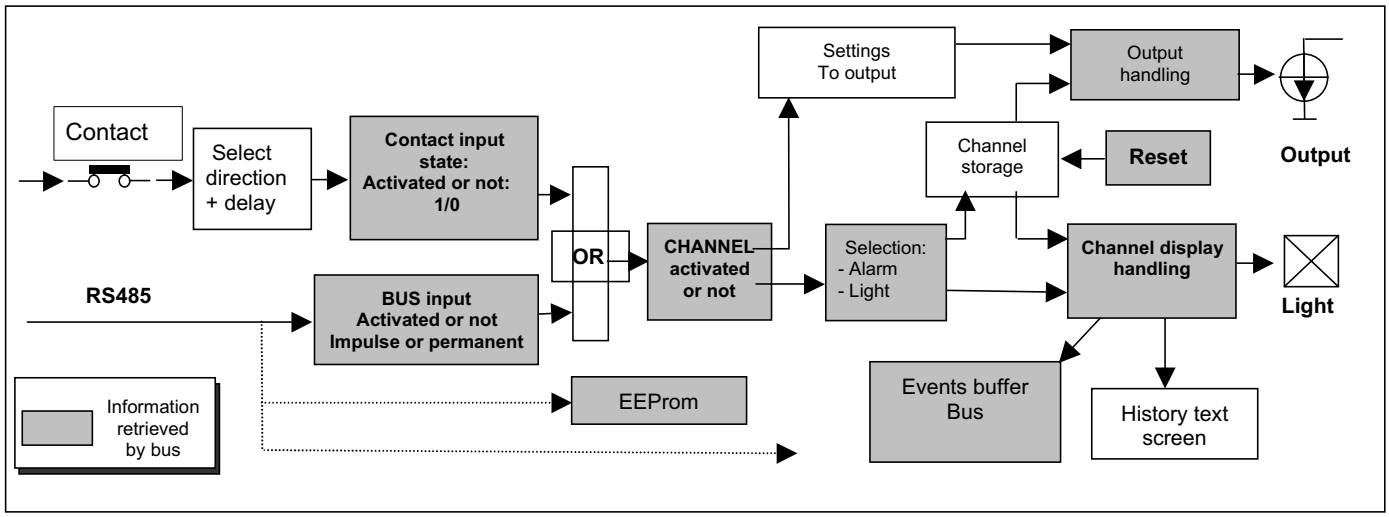

The J3500 is the same principle as the J3000. It is now possible to set the parameters from the front panel thanks to the text display screen, and also by the BUS (RS232 or RS485), rather than the switches on the J3000. It is now possible, via port RS232 (on a PC) or port RS485, to dialogue with the "settings" memory on the J3500. (Note that ports RS232 and RS422/485 are common. The two cannot be used simultaneously.

The J3500 is an autonomous device for managing technical faults. It manages 12 "contact" inputs, which are treated with according to the parameter settings on the front panel. It results in the activation or not-activation of the front indicator leds, the buzzer, the "audible alarm" relay, the "synthesis" relay and the 12 outputs.
The J3500 is an autonomous alarm system. It will work even if there are dialogue problems with its supervisor.

Normal procedure from the contact inputs is:
- Change the state of the "contact input".
- Check the direction and delay validation of the "contact" input.
- If OK, validate the state of the "contact input".
- Check the parameter setting of the channel in Alarm or indicator led.
- If "Alarm" is selected, validate the "Channel" memory.
- Display channel.

A certain number of functions have been added:
- A double link RS422/485 and RS232 of "modbus / Jbus" type
- Storage of transmission and configuration parameters for RS485.
- A system to check for activity on the bus.
- A "history" buffer that can be read and cleared from the front panel.
- An "events" buffer that can be read and cleared from the bus, with
- An internal counter to show the events order .

* Clearing the "history" buffer clears the "events" buffer, but the opposite is not true.
Clearing from the bus only clears the "events" buffer.

The RS485 port allows a dialogue with the outside, which
- Transfers the state of the panel to an "automatic" supervisor
- Centralises the events stored in the "events" buffer
- Activates by remote control the channels on the panel by bus.

Consequently:
A master supervisor can recover the following information by the RS485 port:
- The state of the CHANNEL (activated or not)
- The state of each indicator light (type of light)
- The state of the BUS input memory
- The state of the "events" buffer (current alarms stored)
- The state of the "contact input" (see Transmission instructions).

The descriptions of the RS232 port, the RS422/485 port, the "events" buffer of the communication with possible readings/writings are described in the document "TRANSMISSION PROTOCOL". Please consult this document.

DIFFERENT SEQUENCES

The J3500 allows optimum information management. Each channel can be treated in simple display or in alarm mode. But on each channel (even the one in signalling mode) it is possible to select the contact direction as well as a confirmation delay time.

Simple display or signalling: treatment intended for stable, not too serious information, like Start, Stop, level, temperature, etc. A display channel is displayed in fixed mode for as long as it remains present without audible alarm or release. It can activate an output and the synthesis relay. The "wire control" can be controlled on the input continuity.

Alarm: treatment intended for information with danger and emergency. If it is necessary to call the operator (for example too high level or temperature, fire or triggering) and the operator is absent, the information will be stored and the display will remain until released by the operator. It can activate an output and the synthesis relay. The "wire control" can be controlled on the input continuity.

However, several adjustment settings allow you to modify the sequences to solve problems on the site and can modify the following principles:

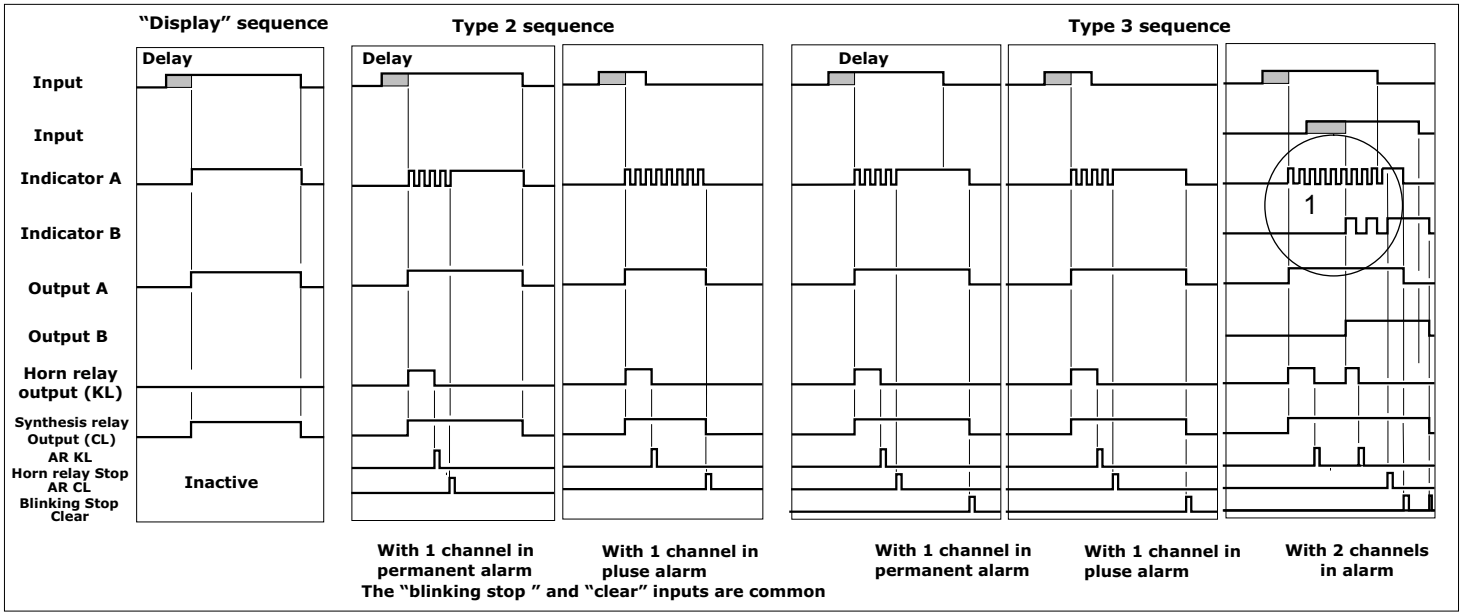

1 : note the display in rapid blinking of the channel in "1st fault". The following channel is displayed by slow blinking.
If the slow blinking sequence is used, the first fault display is no longer possible

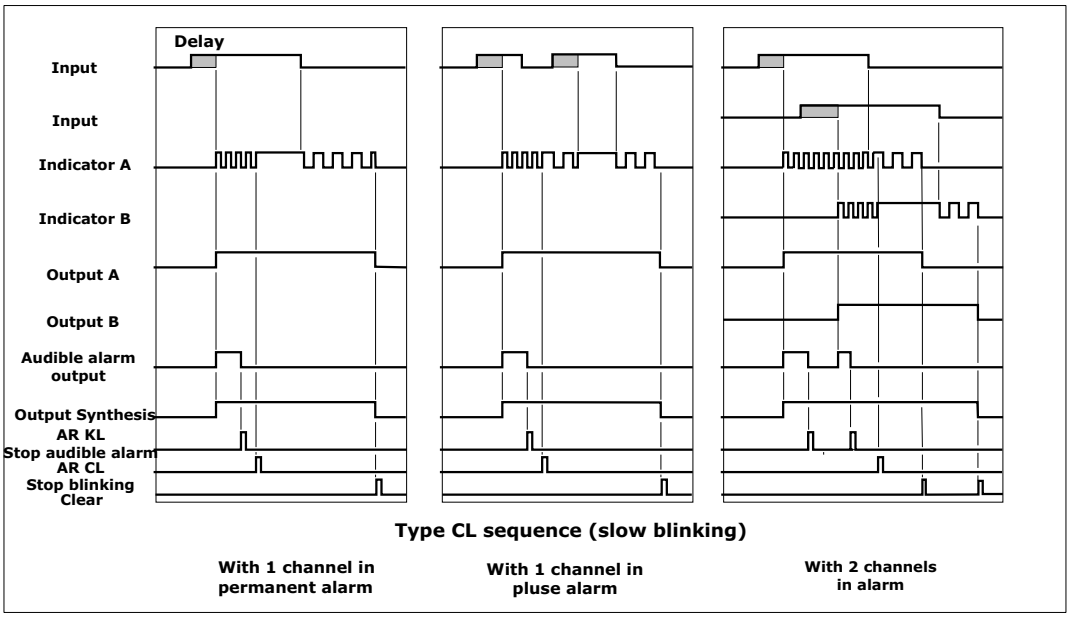

The "Slow Blinking" sequence: similar to type 3 sequence. When the channel is released, but present, the light shows slow blinking, indicating return to normal. The operator can then clear the channel.

PARTICULAR FUNCTIONS

"1st fault" function: Useful for maintenance. Signals the origin of a failure. In the case of an avalanche of faults, the difference between the 1st and 2nd faults is shown by rapid or slow blinking. (The 1st fault is displayed by rapid blinking, the remainder is shown by slow blinking.)
The avalanche begins with the arrival of the first alarm taken into account until released by the operator (passes to fixed light). After release, a new alarm is considered as a first fault.
Discrimination time (the shortest time between 2 alarms) is 5mS.
It is possible to group together several panels to obtain the first fault on an unlimited number of inputs. The discrimination time will be 10mS however many panels are assembled.

Automatic control of the supply voltage: The J3500 is equipped with an an automatic control with adjustable thresholds of the supply voltage values."Undervoltage" or "overvoltage" will be detected and displayed by the blinking of the "supply indicator" on the front panel with audible alarm and release.
The thresholds are adjustable.

Auto-test sequence: The "test leds" and "auto-test" functions are definable. It is possible to programe the elements tested: leds, outputs / audible alarm relay / "general alarm" relay. The direction of the element tested is taken into account (normally activated or not). These tests are controlled by the microprocessor which checks the operation.
"TEST led" implements a "test led" and activates or deactivates all the selected elements at the same time.
"Auto-test": pressing the 2 push buttons or validating the 2 terminals (Test and ACL) simultaneously activates a sequential test cycle (the 12 leds in sequence and the elements defined, in sequence. It is a tracking system, ie channel-by-channel testing and display.).

light intensity adjustement : To activate this function, press the external or front panel "test led" button for longer than 10 sec. (This is for the 12 front panel lights, the supply led, the alarm system led, the bus leds and the back light of the LCD.)
There are five possible settings: 100 %, 80 %; 60 %, 40 %, 20 %. This control can be transferred to several panels.

Automatic Re-start function :

LED CHANGES

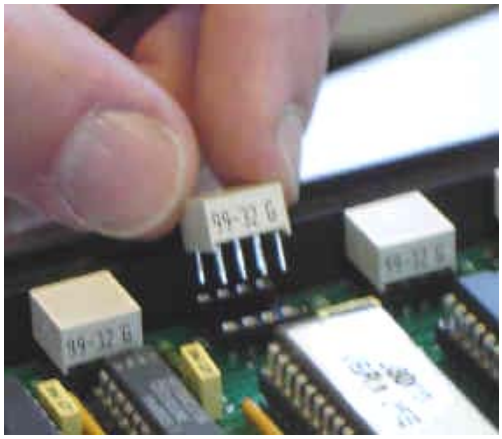

In "led block" type, there is a very strong contrast between on and off states. They can be pulled out, and the colour can be changed. The standard colours are Green, Yellow, Red and Blue.
J2001-00-00 led block 10x10 GREEN (code: 2855)
J2001-00-10 led block 10x10 YELLOW (code: 2755)
J2001-00-20 led block 10x10 RED (code: 2655)
J2001-00-30 led block 10x10 BLUE
J2001-00-40 led block 10x10 WHITE
When changing colour, the 2 staples must be repositioned on the led block depending on the colour, as in the diagram below:

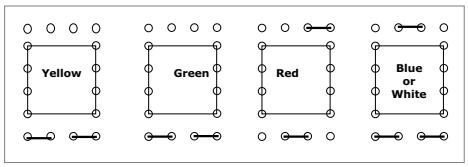

The different states of an indicator light are:
- rapid blinking = 1st fault
- slow blinking = nest fault in an avalanche
- fixed light = stored and released channel
- light off = cable failure (this light signal cannot be released).

MAKING LABELS

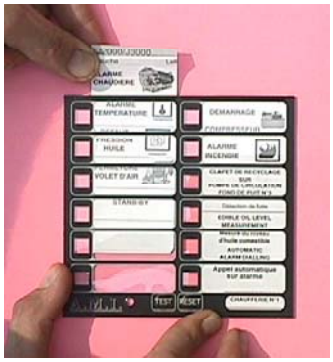

These labels are simple sheets of paper that can be slipped into a transparent folder integrated into the front panel. A blank label is included with each device. They can be handwritten or printed with a colour printer (laser or inkjet). Software in a PC allows you to make them, to add an image, to save and to copy your creations. It is possible to inscribe 4 lines of text per window (for equipment for export, one label can be written in two languages).
It is possible to print on a plastic sheet for countries with a high level of humidity.

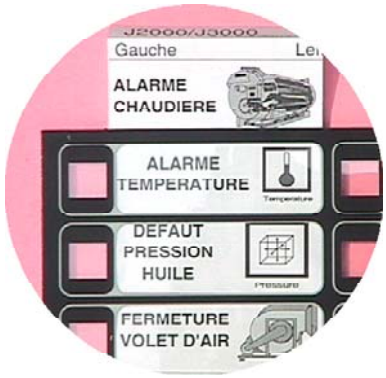

4 lines of text possible
possible to add icons
2 different languages possible

INPUTS

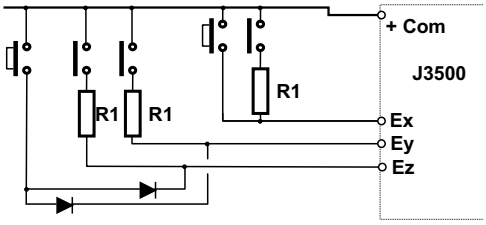

The 12 input contacts can be "dry" or "power" contact with "positive or negative bus", depending on the model of J3500. it is possible to detect a level 1 or 0 (selection "normally open/normally closed"). See the chapter on connections for all the possibilities.
A different delay time can be attributed to each input. The channel is only enabled if it remains present for longer than the selected delay time.
Partial release funtion:
By connecting a diverted push button to the input, it is possible to release one single channel. To release several channels it is necessary to use a reverse diode.

"Cable control" function: This ensures effective control of the continuity by wire on every input. It allows you to control the short-circuits or breaks on the cable. Just put two resistances (one in series and the other in parallel) directly on to the contact to permanently control the mains supply. A cable fault will be displayed by blinking "flash" and audible alarm. Only one "audible alarm" can be released.
The output will not be activated.
R1 = 8.2 Kohms R2 = 43 Kohms.

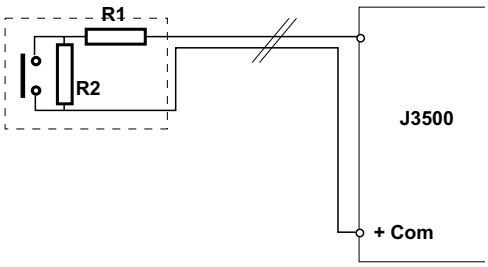

ADDITIONAL INPUTS

The terminals (TEST + AUDIBLE STOP + CL STOP + CLEAR + BLOCKING) will always be connected to external contacts supplied by a positive polarity.

a) TEST terminal: carries out a led test generated by microprocessor. All the leds are lit at once. It is possible to programm the elements tested: leds / outputs / audible alarm relay / "general alarm" relay. The direction of the element tested is taken into account (normally activated or not).
This terminal also allows a remote brightness adjustment.

The order of use sequence of the 3 following terminals must be respected. The STOP CL and CLEAR terminals are inactive if the audible alarm is present.
In type 3 sequence, the CLEAR terminal is inactive if a light blinks. (It is impossible to clear until the blinking stops.)

b) STOP KL terminal (audible alarm stop):
- Traditional function: an activation of the input stops the audible alarm.
By setting parameters, it is possible to group together the STOP KL and STOP CL terminals. In this case, one single external push button will stop the audible alarm and release the light.

c) STOP CL terminal: pressing this moves it to fixed light.
Working in type 2 sequence:
When the alarm disappears, the fixed lights will clear. (A blinking ACL with an input that has returned to normal therefore clears the light as it passes to fixed and then switches off.)
Working in type 3 sequence:
When the alarm disappears, the CLEAR terminal is needed to clear the fixed light.
Working in slow blinking sequence:
For this sequence, pressing once on ACL makes the rapidly blinking lights pass to fixed lights. If the alarm has disappeared, the light automatically goes to slow blinking.

d) CLEAR terminal:
Working in type 2 sequence:
(the CLEAR terminalis not used)
Working in type 3 sequence:
The lights do not go out until they have passed to fixed light, when the input has disappeared and on pressing on the CLEAR button.
Working in slow blinking sequence:
The lights do not go out until they have passed to slow blinking (the input has disappeared) and on pressing the CLEAR button.

e) Locking or inhibition terminal: the locking of the selected channels can be activated by putting the "locking" input on "+". The selected inputs will not be considered while the locking input remains active. The processing of the channels displayed before locking continues (as for the unselected channels). Different locking sequences are possible.
A selected input is active if the locking input is inactive.

f) "Com+" terminal: 18EB terminal (com+) allows you to supply the input contacts by ensuring a protection. This terminal is limited and protected at 100mA. It is possible to supply 3 J3500 panels with the "com+" of one of them (ie 36 inputs)(provided that these 2 panels have a common supply).
In the case of a greater number of channels, diagram 2 "continuous direct current voltage supply" must be followed. But these inputs can be supplied with another voltage.

g) Synchro terminal: (terminal in input/output)
This makes it possible to synchronise the blinking between the different panels. Any blinking of the indicator lights on the panels will synchronise on the signal arriving at the terminal.
- If the synchronisation is not selected on this panel, it is master and emits synchro slots to the other users. (it synchronises thanks to its own slots.)
- If the synchronising is selected on this panel, it receives audible signals from the outside and synchronises with these. The supply of this terminal is specific to the device.

h) 1st fault terminal: (terminal in input/output)
It makes it possible to group several panels together to obtain the 1st fault sequence on all the channels. The presence of a first fault on one of the group of panels is transmitted to the others via this terminal.
The panel which detects a first fault sends a status of this terminal linked to the other panels.
On receiving the status, the other panels display all subsequent information in slow blinking. (This is valid also for the emitting panel.) The supply of this terminal is specific to the device.

OUTPUTS

The 12 standard outputs on the J3500 are of the "open collector" 150mA type.
As an option, these outputs can be dry contact with galavanic insulation. The output card can be equipped with a "flat cable" connector. It allows the use of the M0901 galvanic insulation card equipped with 12 or 14 relays, DIN fixation (mounted on the bottom of the cabinet).

The outputs can be negative or positive safety.
One output can be activated by several inputs. (One input can activate 4 different outputs.)
An output can be activated:

- When an input appears. It then follows the activity of the input.
- On the input storage
- It can follow the status of the light (and blink in the same way). These become "blinking", ie identical to the image of the front panel light (flash, rapid or slow blinking, or off). It can be used for transmission on theexternal synoptic. The "test" function can activate the outputs directly (as for the front panel lights).
- On an input reactivation.
- On the arrival of an input in 1st fault
- In telemonitoring mode.

(For details of these functions, see the section on PC parameter settings / "output" tabs.)

ADDITIONAL

a) KL output: by 1RT relay. A new alarm or an analogic detection on the supply starts this output until released by the operator.
Possible settings:
With positive safety or not
Different types of "audible alarm" output:
- fixed output (permanent until released)
- 1 pulse output (the relay contact swings for 1s, then it returns to its initial position. The sound release is no longer useful in this selection.)
- T1 blinking output defined in the settings
example: 1s + 1s (the output relay blinks to the rhythm of 1s every 1s and can be released)
- T2 blinking output difined in the settings
example: 1s + 2s (the output relay blinks to the rhythm of 2s every 1s and can be released)
If several alarms arrive simultaneously, the "audible alarm" relay will perform the highest level type of sequences (fixed, pulse, T1 or T2) defined by the operator.

b) Synthesis output: by 1RT relay with positive safety or not.
It activates or deactivates (thus falling again):
- if an alarm is detected
- if the analogic detection, the cable control or an internal fault activates (watchdog use). It returns to its initial position when the display fo the event that caused it has disappeared.
Selection allows you to sort the channels which have to act on the "synthesis" relay or not. From then on, it can be activated by a channel in "signalling" as well as by one in "alarm".

c) Integrated buzzer (option)
If required, an internal buzzer can be provided, by adding it to the "audible alarm". It is activated like the KL output relay.

RS232 PORT

The J3500 is equipped with an RS232 communication port situated at the back of the device. This is a "short distance" port (a few metres). This port is especially used for settings via PC. It is possible to dialogue and set parameters automatically. RS232 port.

RS422/485 PORT

The J3500 is equipped with an RS422/485 communication port.
This port is of the 4-wire/2-wire type and is used to cnetralise the automatic system, the supervisor or the AMI BUS scheduler. It is possible to set the parameters.
See the transmission instruction manual.

It is not possible to use the RS232 port and the RS422/485 port simultaneously.
But the two ports have the same possibilities.

PARAMETERS

It is possible to define the parameters of all the functions of the J3500 via:
-the parameter PC software in Windows via the RS232 port or the RS422/485 port
-the front keyboard and the text display screen

The different functionalities of the J3500 will be explained on the PC screen as the parameters are defined. Specific funtionalities which cannot be defined will be described after the parameter definitions from the front panel of the J3500

PC Software:

Installation of the PC software
The software functions in Windows.
To install, insert the CDROM and click on the PC programme. Follow the instructions.
-if the CDROM does not start automatically (a problem encountered with XP), start "Internet Explorer", then, in the menu Start/My computer, click on CDROM. The application will open.Under Windows XP,***it is necessary to be an administrator to install the software.***
-if you have problems installing the "PC parameters" programme of the J3500, your PC is not decompacting the programme files automatically with WINZIP. Do this manually and place it in one file type xxx.exe.

User-friendly menus: the different functions are accessed either via the traditional menu bars or via the icons.

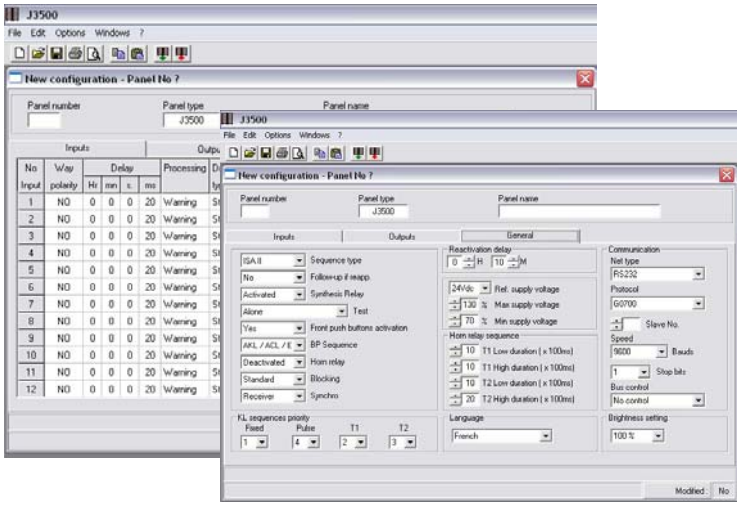

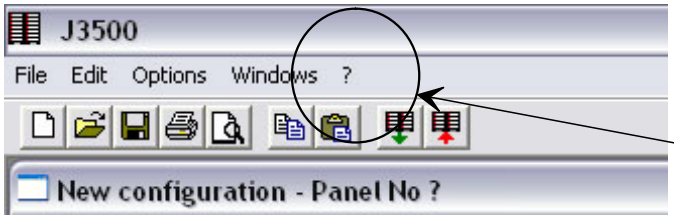

This software is compatible with older versions of the J3500. it is possible to retrieve the settings in an older version and load them onto the latest J3500 model.

There is a help button in the taskbar. The recall menu appears for the different functions, available directly on the screen.

File

- **New**
- **Open**
- **Save**
- **Save as**
- **Read J3500**
- **Write J3500**
- **Print configuration**
- **Print preview**
- **Exit**

- **New**: creates a new settings page from "FACTORY" values
- **Open**: opens a file stored on the PC (hard disk floppy disk)
- **Save**: Saves the running page of settings where it was stored.
- **Save as**: saves the running page of settings in a place and under the name chosen by the operator.

Read J3500: Allows you to read the configuration of a J3500. An auto-search of the J3500 is set off.

After validation, the values of the J3500 parameters are displayed in a new page on the screen.

- **Read J3500**: Sends the parameters of the running page into the J3500 connected. On this type of demand, the number of the slave proposed is that of the open page. Auto-search requests are the identical to those for the reading.
- **Print configuration**: Displays a selection of printers installed on the PC and the page margins.
- **Print preview**: Displays the preview of the open page prior to printing.

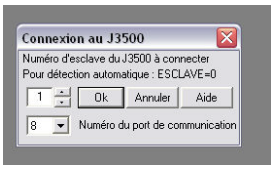

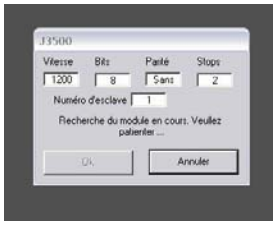

Auto-search:
A window appears allowing you to select the numbers of the slave and the PC port.
- selecting slave 0 launches an automatic search of the slave numbers.
WARNING: in this case, only one J3500 must be connected to the BUS. You can indicate the slave number if it is known.
The selected COM port appears. It may be necessary to check that your PC uses it. (Check by going into:
"Configuration panel / System / Equipment / Peripherals / Port".
The com used by the PC is indicated.)
After selecting these,
An automatic search function is integrated. This application automatically searches for the J3500s com parameters (stop bit speeds and numbers, starting with those set in Options / Preferences).
The search results and the correct values of the communication parameters will be displayed.

Edit

- **Copy the running line**
- **Paste in the running line**
- **Paste the running line in all the others**
- **Copy the data in the running tab**
- **Paste the data in the running tab**

Edit:
Modifies the parameters in the open page:
-Copy the running line: Stores all the parameters of the running line (only valid in the "input" or "output" tabs).
-Paste in the running line: Pastes the stored line in the running line.
-Paste the running line in all the others: copies the line into all the others. This avoids the fastidious task of typing in identical input (or output) data.

- Copy the data in the running tab: Stores all the parameters in the running tab.
- Paste the data in the running tab: Pastes in the open tab all the parameters in the stored tab.

Options

- **Default value of tab "xxx"**
- **All default values**
- **Preferences**
  - **Communication port number**
  - **Communication speed**
  - **Parity**
  - **Number of stop bits**
  - **Semi-duple-**
  - **Language**
  - **Number of recent files**
- **Factory parameters**

Option:
- **Default value of tab "xxx"**: Resets all the parameters of the open tab to the default value (factory values).
Note: when a parameter is selected, the default appears at the bottom of the page in the toolbar.
- **All default values**: Puts all the parameters of the open page to default values.
- **Preferences**: opens a window to select the PC parameters to adjust:
- the communication port number
- the communication speed
- the parity
- the number of stop bits
- the semi-duplex
- the language (displays the language chosen on the computer screen)
- number of recent J3500 visible and accessible in the FILE column
- **Factory parameters**: AMI use only

Window

- **Cascade**
- **List of windows**

Window:
- **Cascade**: the documents are placed in cascade in the main window
- **List of windows**: displays the list of open pages

After activating FILE / NEW on the start-up screen,
a general window with 3 tabs for selection appears:
- inputs
- outputs
- general

Background screen:
-Panel number: this box will be filled in automatically with the value contained in the main screen.
-Panel type: always J3500
-Panel name: choose a title to help you recognise your application. This title is used to name the file to be saved.

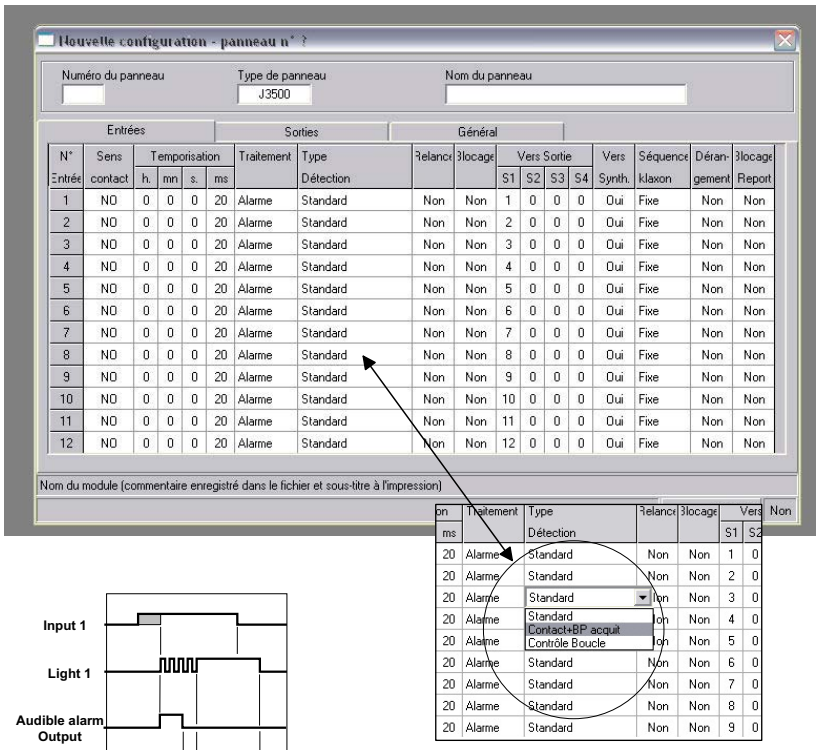

"INPUT" tabs

This is made up of 12 lines, each one corresponding to an input channel.

A double click in this square makes a scroll-down menu appear. Choose the desired value.

Contact direction: Normally open / normally closed

Defines which direction the input contact must be to leave the channel inoperative.

Delay time:
This sets a delay time for validation on an input passing from inoperative to active. The input will not be validated until the end of the delay time. This delay time is valid for a defined channel in indicator light or in alarm mode. It is inactive on return to normal.
Min value: 20ms
Max value: 22hrs 59min 59s 900ms.
Increments of 100ms.

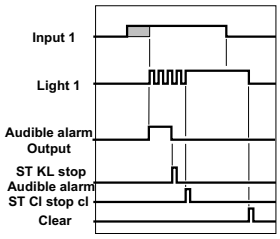

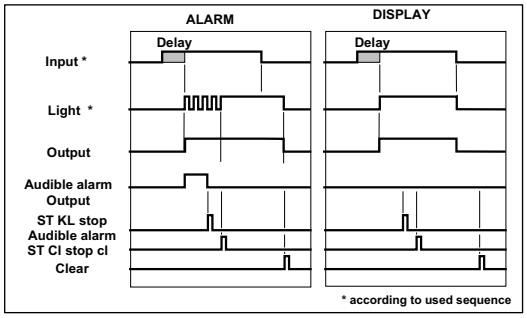

Processing: Alarm or light
- **Alarm**: the information will be stored, displayed in blinking, with audible alarm and release request from the operator.
- **Light**: the front panel led lights up or switches off like an indicator light, but taking into account the contact direction of the input and after delay time.

Type:
- **Standard**: A simple contact is connected to the input. (See diagram of ordinary cabling.)
- **Contact + pushbutton release**: Selective release. By connecting a diverted pushbutton in parallel to the input, it is possible to release one single channel. This makes it possible to release this channel only (and not on the whole panel). A series resistance is needed with the input contact. The release button is connected directly to the input (in parallel with the alarm contact and its resistance.)
To release several channels with the same pushbutton, a reverse diode is necessary.
The operator can release certain channels defined locally;
- pushbutton A only releases channel Ex.
- pushbutton B only releases channels Ey and Ez.
(All the channels can be released from the front panel of the J3500. but the front panel buttons can be deactivated and all the channels can be released via a button connected to the rear terminals (for example, diverted button with the manager holding the key.)
If several selective release buttons are used, each channel will have to be released separately. This means that if channels Ex and Ey are present with "audible alarm", the action "stop audible alarm" on channel Ex will only be effective after stopping the "audible alarm" on the Ey input.

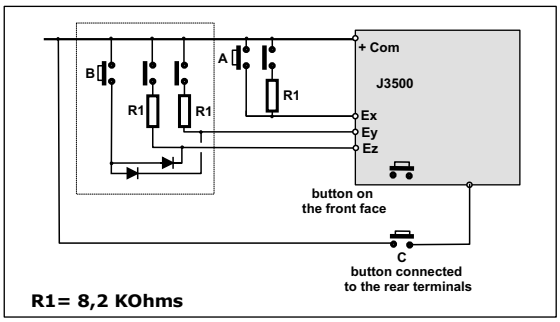

The "Loop control" button is no longer possible.

- **Loop control**
This ensures an efficient control of the line continuity of each input.
It controls any short-circuits or breaks in the cable. Just place two resistances (one in series and the other in parallel) directly on to the contact, to permanently control the mains supply. A cable fault will be displayed after delay time of the fixed filter at 50ms:
-in the case of a channel selected in "alarm", by blinking "flash" + audible alarm. Only the "audible alarm" will be released.
-in the case of a channel selected in "light", by blinking "flash" without the audible alarm.
The output is not activated.

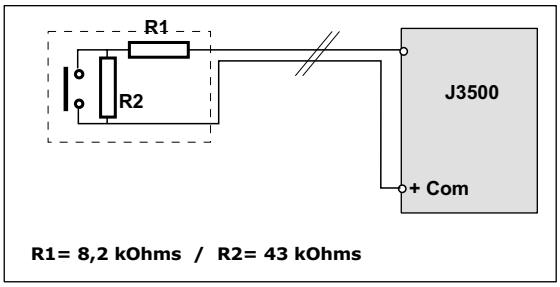

Restart: YES/NO
To avoid overlooking an alarm, relaunch activates an audible and visible reactivation of the alarm after a certain time. This time can be defined in the settings menu, GENERAL tab, and is common to all the inputs. In ISA II and III, if an alarm is present on an input in relaunch mode, when the delay time is up, the channel passes to slow blinking (unless it is in 1st fault blinking or flash) and the horn is reactivated.
Standard: No for all inputs.

Locking: YES/NO. In certain specific configurations of an installation, “present defects” can be considered as being in a “normal state”. (For example, low oil pressure is not an alarm if the diesel group is in break mode.) The locking function inhibits, deactivates these inputs when the locking input is present (ie connected to the “com+”). The channel selected in locking will be inactive (not processed) for as long as the Locking remains active.
A channel selected in locking is active if the locking input is inactive. Similarly, an unselected input will be processed even while locked.
If the channel selected in locking appears while locked, it will be inhibited after the delay time for input filtering. If this channel is still present at the time of unlocking, it will be displayed immediately. An automatic reset can be generated on unlocking. Different types of unlocking are possible. (See Parameter settings, “general parameters”.)

Standard: No for all inputs.

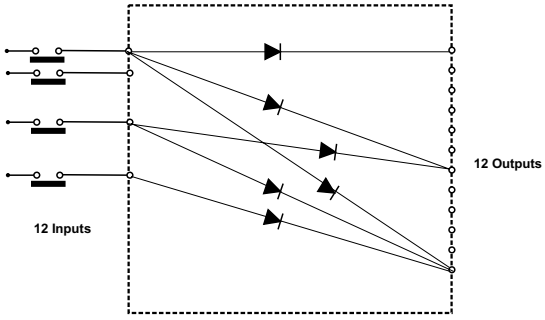

To OUTPUT: “output assignment” function
It is possible to activate 4 outputs with one input.
Makes it possible to group the channels together in synthesis for remote control depending on a number of criteria.
For example:
- “high risk” outputs
- alarms intended for the mechanics and those intended for the electricians.
The output will remain active as long as one of the causes which set it off remains present. (equivalent of “OR”).
In standard mode, the output corresponding to the input is proposed.
If several inputs activate one output, this output will function as if it has several parallel contacts.
Standard: input E01 activates output S01
E01 activates S02 … E12 activates S12

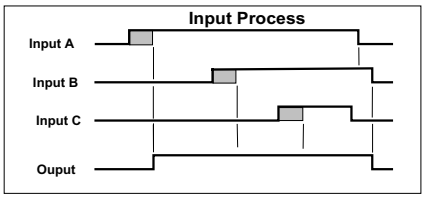

To synthesis:
It is possible to select whether this channel should activate the synthesis relay or not.
The synthesis relay can be selected with or without positive safety (see parameter settings in the “general” tab). It activates or deactivates (thus falling) in the following cases:
- If an alarm or the input with the synthesis relay selected is considered
- If the analog voltage detection, the cable control or an internal fault is present (watchdog use). It will return to its initial position when the display of the phenomenon that caused it has disappeared, and on release.
It can be activated either by a channel in “light” or in one in “alarm”.
It is a 5th way to make a synthesis carry possible, equipped with a 1RT contact (galvanic insulation) and can be used as a “watchdog”.
Standard: Yes for all inputs.

Horn sequence: “Audible alarm” output: by relay with 1RT contact, with or without positive safety (see general tab).
A new alarm, the detection of the analog threshold on the supply or a bus alarm will set off this output until it is released by the operator.
Possible parameter settings:
The audible alarm relay can have 4 types of different tones with an adjustable priority allowing an audible alarm for different types of danger. This allows a better sound distinction depending on the type of alarm arriving. Select 1 from 4 sound sequences to be activated on arrival on the channel.
-“Fixed”: the audible alarm is activated continuously until released.
-“One pulse: the audible alarm is activated for 1s only, making it unnecessary to release.
-“T1/T2”: 2 types of blinking sequence defined by the user. For example: 1s/1s blinking and 1s/2s blinking. These two sequences require sound release.
The adjustment of the “T1/T2” sequences and the selection of priorities of the 4 sequences is in the main menu.
Standard: fixed for all inputs.

For example: 1s+2s (the output relay blinks 1s for every 2s. It can be released.)
If several alarms arrive simultaneously, the “audible alarm” relay will carry out the highest level sequence (fixed, pulse, T1 or T2) defined by the operator in the general tab.

DISTURBANCE:
This allows you to disable the audible alarm generated by a channel which comes back in cycles (faulty sensor). The channel will be displayed blinking, with no audible alarm. If the input is inactive (channel cleared) the light will blink very slowly, to indicate the temporary settings of the channel.

Carry lock:
A disabled channel could activate a certain number of outputs by carry. In order to avoid ill-timed actions on the outputs due to faulty inputs, it is possible to prevent these carry-overs when the channel is disabled.

“OUTPUT” tab

(see the chapter on outputs for the description of the functionalities)

Direction:
This sets the output with or without positive safety (normally activated or not)
Standard: negative for all outputs

Controlled by:
This defines the type of output process:
- input
- input+ reactivation
- channel storage
- front panel led
- 1st fault
- telemonitoring

The 12 standard outputs of the J3500 are of the 150mA “open collector” type. The output card can be equipped with a screw-in connector or a “flat cable” connector for an extension card.
It is possible to use the additional M0901 galvanic insulation card equipped with 12 or 14 relays, DIN fixation (mounted at the bottom of the cabinet).

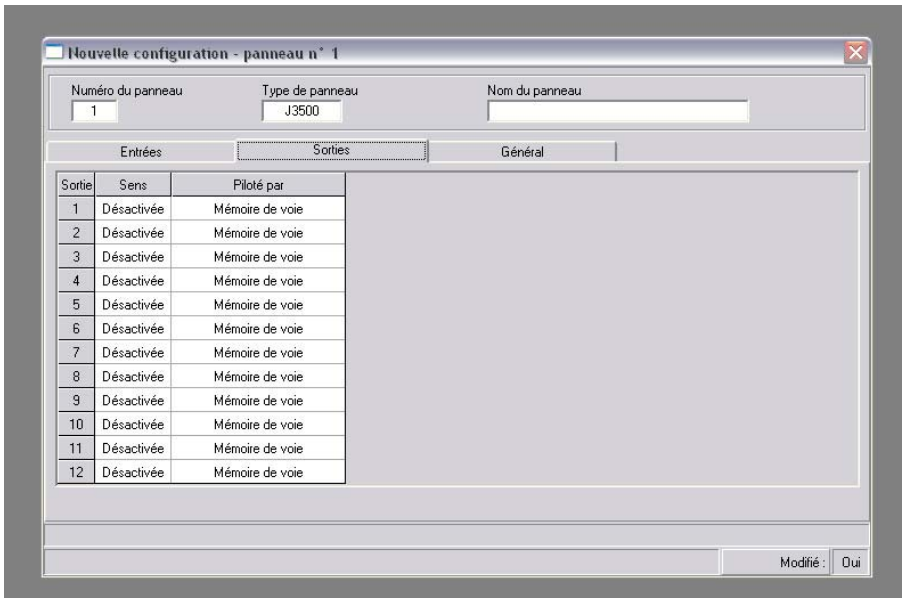

Sortie	Sens	Piloté par
1	Désactivée	Mémoire de voie
2	Désactivée	Mémoire de voie
3	Désactivée	Mémoire de voie
4	Désactivée	Mémoire de voie
5	Désactivée	Mémoire de voie
6	Désactivée	Mémoire de voie
7	Désactivée	Mémoire de voie
8	Désactivée	Mémoire de voie
9	Désactivée	Mémoire de voie
10	Désactivée	Mémoire de voie
11	Désactivée	Mémoire de voie
12	Désactivée	Mémoire de voie

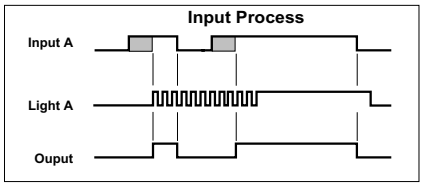

“Input”: the output is activated by input after delay time. If the input disappears, the output disappears even if it has not been released. It will be reactivated on reappearance at the input. This function is intended for remote maintenance. It shows the return to normal, the arrival of a new alarm on an unreleased channel and the degree of urgency. If several inputs activate one output, the output functions as if it were activated by several parallel contacts.

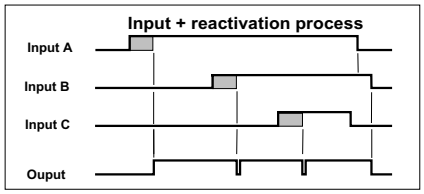

“Input + reactivation”: an output can be activated by several channels. This function reactivates the output when another input appears assigned to the same output. In this case of an input arrival activating an output already activated, the output will be deactivated for 1s, then reactivated. This output will be finally deactivated with the “return to normal” of the last channel to have activated it.

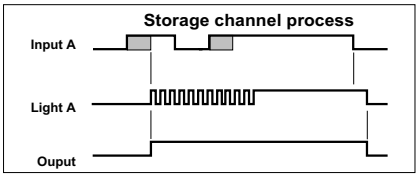

“Storage channel”: the output is activated as soon as the light appears on the front panel. It will remain so for as long as the channel is present and until released by the operator.

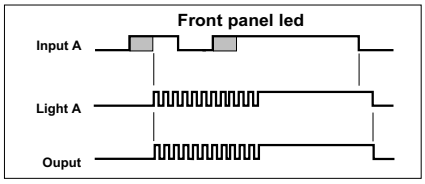

“Front panel led”: the output will be the exact image of the front panel led with flash, rapid and slow blinking, fixed light and off. This function is intended to carry the signalling to external lights or a lighted synoptic. If an output is activated by several channels, it follows the blinking with the highest priority.
Blinking priority:
Fixed (highest), flash, 1st fault, slow (lowest)

“1st fault”: the output will only be activated if one of the input channels affecting the output is in first fault.

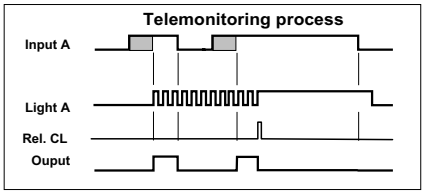

“Telemonitoring”: this is an “input + reactivation” with a particular effect:
- The output follows the input and swings on the arrival of the input after delay time.
- The output goes back to normal on return to normal of the input or after release by the operator (acknowledgement) if the input is still present. If the input reappears, the output reactivates. The light and the audible alarm will only be reactivated if the light is out. (after total release and disappearance).

- In the case of an output controlled by several inputs, if an input is already present and another appears, the output will deactivate for 1s and reactivate until all the inputs controlling it have disappeared.
This function is intended for remote maintenance. It shows return to normal, the arrival of a new alarm on an unreleased channel, the operators acknowledgement of the alarm and the level of urgency.

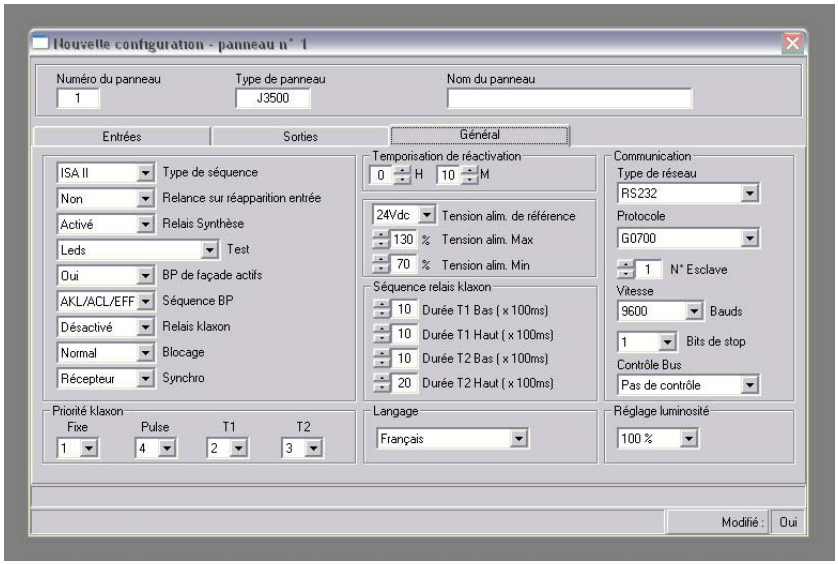

Type of sequence: (see chapter on sequences and inputs for the details of the funtionalities)
Defines the type of sequence with which the alarm will be processed.
- “ISA2”: a sequence with display of 1st fault in rapid blinking and the following faults in slow blinking. After release, the light goes to fixed if the input is still present and switches off automatically on return to normal. The cable fault is displayed in “flash”.
- “ISA3”: idem, but the operator releases it. It goes to fixed after release, whether the fault is still present or not. Clearing is only possible after the fault has disappeared (1st fault possible, loop control possible).
- “CL”: similar to ISA III. On the arrival of a fault, display is by rapid blinking. After release, the light goes to fixed. As soon as the fault disappears, the display in by slow blinking. Clearing is only possible after the fault has disappeared (the light is in slow blinking). If a fault had disappeared and then reappears, the display goes from slow blinking to fixed (loop control possible, 1st fault impossible).
Standard: ISA II

Restart on reappearance of input: This informs the operator from the front panel that an alarm that is displayed and stored but not released, has disappeared and returned. When an alarm reappears after being released, it is considered as a new alarm (change or blinking and recharging of horn). In ISA II and III a reactivated alarm can be in 1st fault.

Synthesis relay: can be selected normally activated or normally deactivated (with or without positive safety). It can be used as a watchdog.

Test:
The parameters for action on the “test” button or terminal can be set. This can set off:
A test led, a test led + output test, a test led + audible alarm, a test led + outputs + audible alarm. The direction of the element tested is taken into account (normally activated or not). These tests are controlled by the microprecessor, which checks that it is working correctly.

“TEST led”: carries out a “test led” and activates or deactivates simultaneously all the elements selected.

“Auto-test”: pressing the 2 push buttons or validating the 2 terminals (Test and ACL) simultaneously activates a sequential test cycle (the 12 leds in sequence and the elements defined, in sequence. It is a tracking system, ie channel-by-channel testing and display.). The auto-test will only activate the elements selected in “Test”.
Standard: Lights only.

Active front panel pushbuttons:
If the “test” and “reset” buttons are used by remote, it is possible to forbid the use of the front panel buttons Test and Reset.
The Prog button will keep access to the history and the password is still necessary to access the parameters.
Once in the parameters, the Test and Reset buttons can be used to ensure the parameter settings only. The rear terminals for external buttons remain active.
Standard: Yes (active)

PB sequence:
- “AKL/ACL/CLEAR”: three rear buttons are necessary: “Audible alarm” Stop, Release (stop blinking), Clear.
It is necessary to press three times on the front “reset” button.
In the case of ISA II only two buttons are required.
- “AKL+ACL/CLEAR”: two rear buttons are required: Stop Release (the audible alarm and the blinking stop simultaneously) and Clear. You must press twice on the front “reset” button.
In the case of ISA II only one pushbutton is required. (It is possible to use the AKL or ACL terminals interchangeably.)
Standard: AKL/ACL/CLEAR: this groups the “Stop audible alarm” and “Stop blinking” functions on one button.

Horn relay: This may be selected normally activated or normally deactivated (with or without positive safety).

Locking: After an input locking sequence, the channels can be reacknowledged using the alarms present or by automatic reset. When an alarm is displayed:
- in normal: if a channel is present at the time of locking, it must be released by the operator.
- reset: if a channel is present at the time of locking, it will be released automatically and cleared without the operator.
Standard: normal

Synchro: This synchronises the blinking on the different panels. All the blinking lights on the panel will synchronise on a clock generated by one of the panels positioned as “transmitter”.
- in transmitter, the panel transmits synchronising intervals to the other panels. (It synchronises itself with its own intervals.) Only one panel can be in transmitter mode.
- in receiver, the panel receives the pulse pips coming from the outside and synchronises with them.
Standard: receiver

Horn priority:
This function orders the degree of urgency by sound discrimination. Type 1 is the highest, ie “EMERGENCY”, type 4 is the lowest, ie “NOT URGENT”.
For example: if the horn is already activated with a priority 3 sequence (low), the arrival of a new alarm of priority 1 (high) will change the audible alarm. The priority 1 sequence replaces the priority 3 sequence.
Standard: Fixed priority = 1, T1 = 2, T2 = 3 and Pulse = 4.

Reactivation delay time: If the channel parameters are “with restart” in the “INPUT” tab, and present in display with operator release, the display will be reactivated (blinking + audible alarm) at the end of the reactivation delay time. (Minimum value 10min, maximum 22h 59min). The channel will be reactivated using the same type of blinking (rapid or slow). Reactivation only operates if the input is still present at the end of the delay time.

Reference supply voltage:
For the J3500 supplied with 24Vdc / 24Vac / 48Vdc: This indicates the nominal value of the J3500s supply voltage. This value is used to calculate an alarm for “voltage too high” and “voltage too low”. The thresholds must be indicated in % of the nominal voltage. If the threshold is exceeded, the alarm will be displayed on the front panel voltage led of the J3500 as well as on the text display screen.
- possible values: None / 24Vdc / 24Vac / 48Vdc / 110Vac / 125Vdc / 200Vdc / 220Vac
- None the software displays this value for the reading of a J3500 that has a precious version of the programme.
For a J3500 with a supply equal to or greater than 110Vac: they are equipped with a stabilised internal segmentation which transforms the current to 24Vdc. Because voltage control is carried out on the 24Vdc, no threshold can be detected in this version. However, it is advisable to set the parameters of the voltage used.
In a subsequent version, the voltage will be detected directly from the supply voltage. The software already integrates the selections (for a 220Vac selection, the maximum threshold is 118 %. With the other selections, the maximum threshold is 130 %).
- default value: 24Vdc

Language: This allows you to select the language to be used on the J3500 display screen.

Communication: Selects the port used on the J3500. The possible choices are: RS232, RS485 (2-wire) and RS422 (4-wire). The panel is delivered in RS232.
Communication on two ports simultaneously is not possible. If the J3500 is used in BUS RS485, loading or retrieving a PC parameter settings programme in RS232 is not possible. To do this, you have to select manually (front panel settings) the RS232 port. This temporarily interrupts the RS485 communication.

Protocol: G0700 / Automatic:
Default value: G0700
The J3500 can receive an optional RS422/485 communication card. It is possible to connect it in MODBUS protocol to centralise the alarms.
It then becomes possible to activate each input by bus and to reread the internal history of the last 64 events.
In the case of use of a supervisor or automaton, the choice must be “automaton”.
The “AMI G0700” bus manager centralises with print and time stamp, and with the remote alarm carry-overs.
In this case the protocol selection must be G0700. (See the “transmission instructions”)

J3500 slave number setting: 1 to 64

Transmission speed setting: 1200, 2400, 4800, 9600, 19200

Bit stop number setting: 1 or 2

Bus control: it is possible to control the presence of a bus. Choose an adjustable delay time. If the panel does not receive a frame during the delay time, it will display a flashing red alarm led “?” with a releasable audible alarm (message in the text display screen).

Brightness: this allows you to adjust the brightness of the front panel display leds. The value is automatically reset to 100 % after a power cut.

PARAMETER SETTINGS from the front panel

GENERAL MENUS

Input parameter settings menu

-Contact direction
-delay time on input
-channel locking
-continuity control

Parameter settings menu Signals and processes

-Alarm or simple signal
-multiple types of sequence
-restart alarm
-reactivation acc. to "input" state
-overall release or per channel
- management of release buttons and terminals

Associative menu of Inputs / Outputs

-association of 4 possible outputs on each input
- selectable outputs in synthesis

Output parameter settings menu

-with or without positive safety
-activation linked to input,
to memory
blinking
in 1st fault on avalanche

12 "contact" inputs

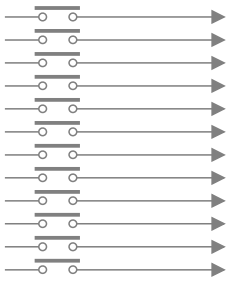

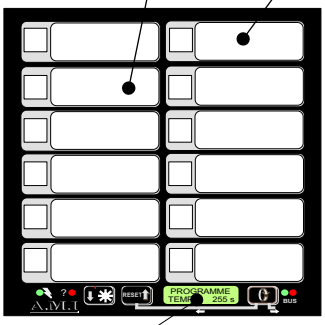

12 "open collector" outputs possible "contact" output

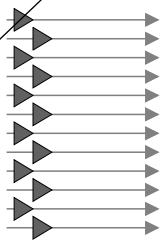

Supply
-direct or alternative
-permanent control of the supply (min/max thresholds)

TEXT screen

-settings direct from panel
-alarm history display
-specific alarm display
-3 possible languages
-battery save

The functions that can be set via the text display screen are the same as those described in the PC software. To simplify these instructions, only the handling particularities will be described. For details of each function, please see the preceding pages.

The three keys of the J3500 are used in programming mode. Warning: the functions of the "test led" and "reset" keys change in programming mode: "test led" = minus and "reset" = plus.

Prog key: pressing on this for 2s allows the display of the history (which can scroll down using the "test led" and "reset" keys. Pressing for a longer time (10s) starts the programming mode. In "history" or "programme" mode, pressing briefly returns to normal working. The Prog key is only active when the audible alarm has been released. In Prog mode, the alarms are not processed.
If Prog mode is selected, this key lets you pass on to the next step, but also to validate the parameter change.

Minus key (or test led): this key allows you to change a parameter or to decrement a value depending on the type of parameter to be changed.

Plus key (or reset): this key allows you to change a parameter or to increment a value depending on the type of parameter to be changed.

Prog and minus keys simultaneously: this allows you to go back to the previous step in the programme. The parameter that was being changed will not be taken into account.

Note: if there is no action on any of these keys, the J3500 exits the programme mode automatically after 45 seconds, unless it is when typing the password, in which case it is after 15 seconds. After exiting the programme mode, the J3500 does a complete initialisation.

- if settings are changed, the new setting will be saved as it moves to the next programme step. (Which means that if you wait too long, the J3500 will go to "normal working" without saving the modification.
- if you cannot enter the programme mode, your panel may be in alarm (blinking on front panel) with the audible alarm activated. This must be released to access the settings menu.

symbols used
▷ operating mode
⇨ general or parameter explanation

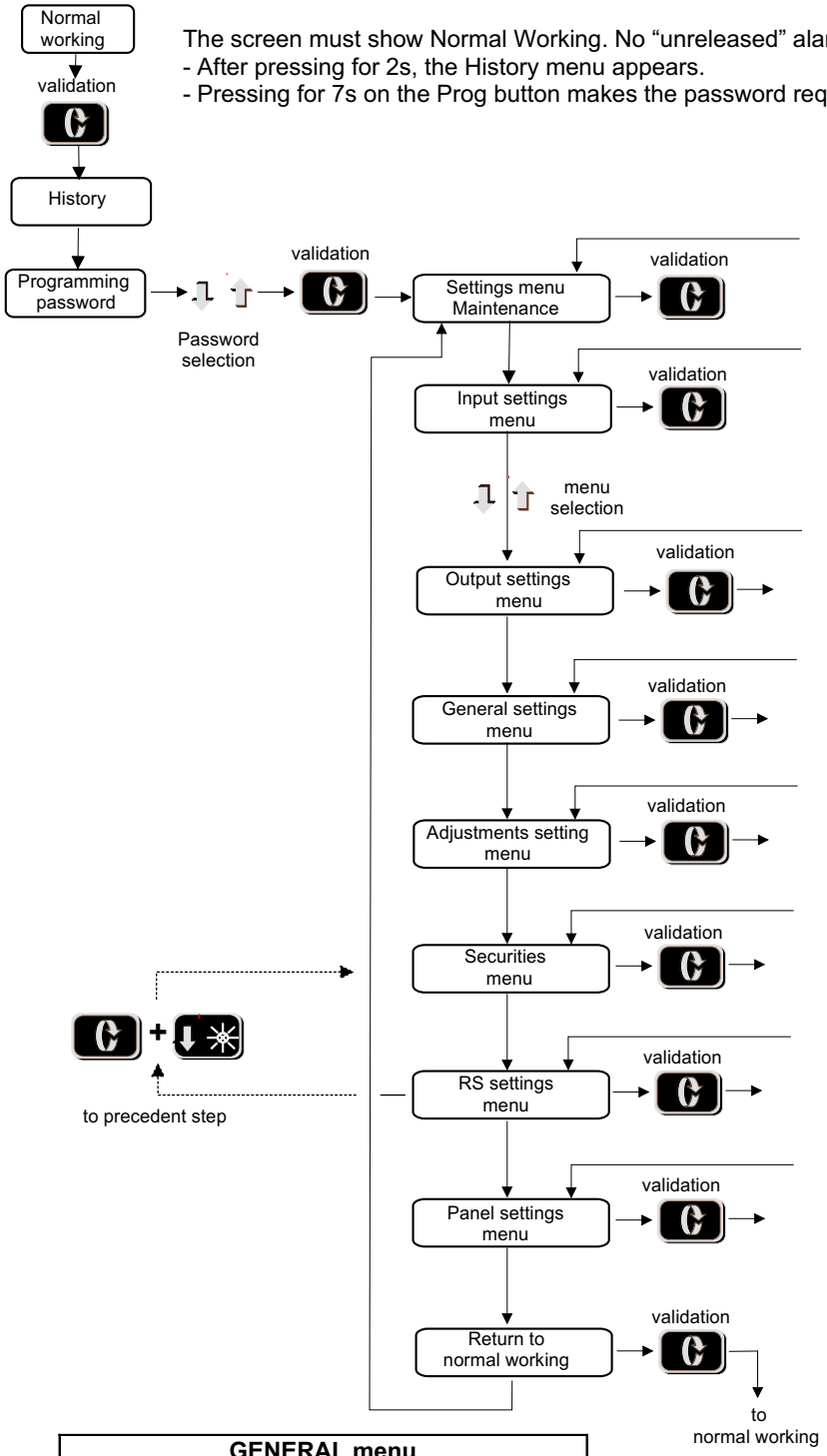

The screen must show Normal Working. No “unreleased” alarm must be present.
- After pressing for 2s, the History menu appears.
- Pressing for 7s on the Prog button makes the password request appear.

▷ To enter the programming mode, press on the prog key until you obtain “PROGRAMMING PASSWORD” on the LCD. On releasing the key, the password to type in blinks. At this time you cannot scan the inputs.
⇨ **Warning: you cannot enter the programming mode if the horn is working**.

▷ Enter your password (by default it is 0001) using the plus and minus keys.
⇨ to make typing the password easier, rapid incrementation is possible by pressing continuously on the plus and minus keys (increments of 1 for 0 to 9, then 10 for 9 to 99, then 100 for 99 to 999 and finally of 1000 for 999 to 9999).

⇨ Note: if there is no action on any of these keys, the J3500 exits the programme mode automatically after 45 seconds, unless it is when typing the password, in which case it is after 15 seconds. After exiting the programme mode, the J3500 does a complete initialisation.

▷ When the password is typed in, press on the prog key.
If the password is wrong, the J3500 returns directly to normal working mode.
⇨ If it is correct, the programme step is changed and “SETTINGS MENU maintenance” shows on the LCD.

▷ if you press the prog key at this stage of the programme, you enter the maintenance menu (**see below**).
By pressing on the minus or plus keys, you select another menu to change settings (as the diagram on the left shows; for minus “INPUT SETTINGS MENU”, for plus “RETURN TO NORMAL WORKING”).

⇨ Note: whatever the menu, pressing “minus” passes to the previous menu, pressing “plus” passes to the next menu. Pressing prog allows you to enter the menu. Pressing “prog” in “Return to normal working” allows you to exit the programming mode.

GENERAL menu	
Scanning order	
↓	**Settings menu Maintenance**
	Settings menu Inputs
	Settings menu Outputs
	Settings menu General
	Settings menu Adjustments
	Settings menu Security
	Settings menu RS
	Settings menu Front panel
	Return to normal working

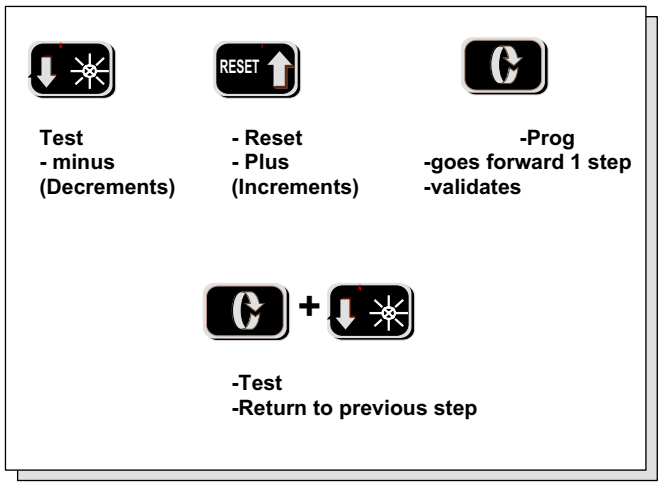

The different menus

GENERAL menu	
Scanning order	
↓	Settings menu Maintenance
	Settings menu Inputs
	Settings menu Outputs
	Settings menu General
	Settings menu Adjustments
	Settings menu Security
	Settings menu RS
	Settings menu Front panel
	Return to normal working

Maintenance menu		
Scanning order		Choice
↓	Inputs	1 to 12
	Disturbance	No / Yes
	Locking carry	No / Yes
	Maintenance configuration	- user - factory
	Return to normal working	No / Yes

→

If FACTORY choice	
Confirm reconfiguration	No / Yes

Inputs menu		
Scanning order		Choice
↓	Inputs	1 to 12
	Direction	NO / NC
	Input delay time	H / Min / S / mS
	Sequence type	- Alarm - Light
	Detection type	- Standard - Contact + release button - Loop control
	Restart	No / Yes
	Locking	No / Yes
	To outputs	SX1/SX2/SX3/SX4
	Synthesis relay	No / Yes
	Horn sequence type	None / fixed / Pulse / T1 / T2
	Inputs configuration	- User - Factory
	Return to normal working	No / Yes

→

If FACTORY choice	
Confirm reconfiguration	No / Yes

Outputs menu		
Scanning order		Choice
↓	Outputs	1 to 12
	Safety	- Positive - Negative
	Output function	-Input -Input + reactivation -Automatic -Blinking -1st fault -Telemonitoring
	Outputs configuration	- User - Factory
	Return to normal working	No / Yes

→

If FACTORY choice	
Confirm reconfiguration	No / Yes

Settings menu		
Scanning order		Choice
	Restart delay time	H / Min
	Supply reference	24Vdc / 24Vac / 48Vdc / 110Vac / 125Vdc / 200Vdc / 220Vac
	Supply voltage upper threshold	X %
	Supply voltage lower threshold	X %
	Settings sequence T1 low	Xs Xms
	Settings sequence T1 high	Xs Xms
	Settings sequence T2 low	Xs Xms
	Settings sequence T2 high	Xs Xms
	Settings configuration	- User - Factory
	Return to normal working	No / Yes

If FACTORY choice	
Confirm reconfiguration	No / Yes

Security settings menu		
Scanning order		Choice
	Previous code	
	New code	
	Configure new code	
	Return to normal working	No / Yes

RS Settings menu		
Scanning order		Choice
	Series port	RS232 / RS422 - 4 wire RS485 - 2 wire
	Protocol	G0700 / Automatic
	Slave number	1 to 64
	Transmission in bauds	1200 / 4800 / 9600 / 19200
	Stop bit	1 / 2
	8-bit transmission	
	Transmission without parity	
	Delay time bus control	None / 1 min / 5 min / 10 min
	RS configuration	- User - Factory
	Return to normal working	No / Yes

If FACTORY choice	
Confirm reconfiguration	No / Yes

Panel Settings menu		
Scanning order		Choice
	Language choice	French English Spanish
	Reset events buffer	No / Yes
	Panel configuration	- User - Factory
	Return to normal working	No / Yes

If RAZ choice	
Confirm Reconfiguration	NO / YES

If FACTORY choice	
Confirm reconfiguration	No / Yes

FACTORY PARAMETERS

Input X	Possible settings	Factory
Contact direction	NO / NC	NO
Delay time	22h 59min 59s 900ms increments of 100ms, min value 20ms	00h 00min 00s 20ms
Process	Alarm / light	Alarm
Type	Standard / Contact + button Loop control	Standard
Restart	YES / NO	No
Locking	YES / NO	No
To outputs	S1 = 1 to 12 / S2 = 1 to 12 / S3 = 1 to 12 / S4 = 1 to 12	S1 = X / S2 = 0 / S3 = 0 / S4 = 0
To synthesis	YES / NO	No
Horn sequence	None / Fixed / pulse / T1 / T2	Fixed
Disturbance	YES / NO	No
Lock carry	YES / NO	No
OUTPUT X	Possible settings	Factory
Direction	Deactivated / activated	Deactivated
Generated by	Input Input + reactivation Channel storage Front panel led 1st fault Telemonitoring	Channel storage
General	Possible settings	Factory
Sequence type	ISA II / ISA III / Slow blink	ISA II
Restart on reappearance of input	YES / NO	No
Synthesis relay	Deactivated / activated	Activated
Test	Leds Leds with outputs Leds with horn Leds with outputs + horn	Leds
Front panel buttons active	YES / NO	YES
Button sequence	AKL / ACL / CLEAR AKL+ACL / CLEAR	AKL / ACL / CLEAR
Horn relay	Deactivated / activated	Deactivated
Locking	Normal / Reset	Normal
Synchro	Transmitter / receiver	Receiver
Horn priority	1 / 2 / 3 / 4	Fixed=1 / pulse=4 / T1=2 / T2=3
Reactivation delay time	22h 59min minimum value 1min	10min
Reference supply voltage	24Vdc / 24Vac / 48Vdc / 110Vac / 125Vdc / 200Vdc / 220Vac	24Vdc
Max supply voltage	105 % to 130 % restricted to 118 % in 220Vac	130 %
Min supply voltage	95 % to 70 %	70 %
Horn relay sequence	T1 low 1 to 50 x 100ms T1 high 1 to 50 x 100ms T2 low 1 to 50 x 100ms T2 high 1 to 50 x 100ms	T1 low 10 x 100ms T1 high 10 x 100ms T2 low 10 x 100ms T2 high 20 x 100ms
Language	French / English / Spanish	French
Communication Network type Protocol Slave Speed Stop bits Bus control Brightness adjustment	 RS232 / RS 485 / RS422 G0700 / Automatic 1 to 64 1200 / 4800 / 9600 / 19200 1 / 2 none / 1min / 5 min / 10 min 20 %, 40 %, 60 %, 80 %, 100 %	 RS232 G0700 1 9600 1 none 100 %

HISTORY MODE

In normal working, the display screen allows you to review the last events.
A history buffer stores the last 64 events occurring on the panel: appearance of alarms with type of led display on the front panel, operator release and the blanking. The buffer is a FIFO type. The most recent event is no. 1, the oldest can be up to no. 64. They are stored in the J3500 with a “button” battery. This history can be accessed and cleared from the front panel.

The first 12 events are created to correspond to the initial state of the device (channels 1 to 12 switched off) in the following two cases:
- switching on of the J3500
- return to normal working after programming (manually from the front panel or by the bus).
(Exiting the programming mode is considered as a restart of the device.)
These 12 events can be cleared from the front panel in the programme.

To enter the history mode, press the prog key until the first line of the LCD shows “XX HISTORY”. On releasing the prog key, the history mode is active.
Note:
- In history mode, the J3500 always scans its inputs. If a new alarm appears, the J3500 automatically exits history mode and the key regains its reset function (stop horn, stop blinking, clear).
- If there is no action on the plus or minus keys for 45 seconds, the J3500 exits history mode automatically.
- You cannot enter history mode if the horn is working.
- When the J3500 is switched off, a batter allows it to save the history.

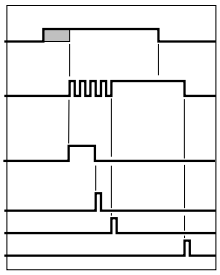

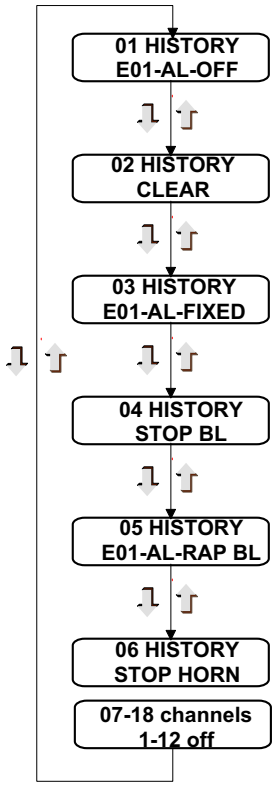

EXAMPLE:

After switching on and before reading the channels, an extinction cycle is automatically generated. Consequently, after switching on, the history buffer always begins with 12 extinction events (channels 1 to 12).
For the sequence shown left , you will get the historic, below.

The number in front of HISTORY always corresponds to the event being viewed. 01 is always the last event occurring.

E01: the event concerns input 01
AL: Channel 01 is in alarm (VO if the input parameter is light)
OFF: the light associated with input 01 is off.

The event is pressing on the clear button by the operator.

E01: the event concerns input 01
AL: Channel 01 is in alarm
FIXED: the light associated with input 01 has passed to fixed light.

The event is pressing on the stop blinking button by the operator.

E01: the event concerns input 01
AL: Channel 01 is in alarm
RAPID BL: the light associated with input 01 has passed to rapid blinking.

The event is pressing on the stop horn button by the operator.

Switching on of the 12 off channels.

Prog key: this lets you exit the history mode and return to normal working.

Minus key (or test led): this lets you pass to the previous event in the history.

Plus key (or reset): this lets you pass to the next event in the history.

OTHER POSSIBLE DISPLAYS:

XX HISTORY EXX-AL-SL BL	SL BL: the light associated with input X has passed to slow blinking
XX HISTORY EXX-AL-FLASH BL	BL FLASH: the light associated with input X has passed to flash blinking
NO EVENTS OCCURRING	The events buffer is empty, no history display.

POSSIBLE DISPLAYS IN NORMAL WORKING

In normal working, certain information can replace the display “NORMAL WORKING”:
- LOCKING ACTIVE
- HIGH SUPPLY VOLTAGE
- LOW SUPPLY VOLTAGE
- BUS ALARM
- CUT WIRES CHANNEL NO XX
- SHORT CIRCUIT CHANNEL NO XX

This information is displayed with a number and scrolls ever 4 seconds.

Example:
If the locking is active and channel 12 is in cut wires, the following will be displayed:

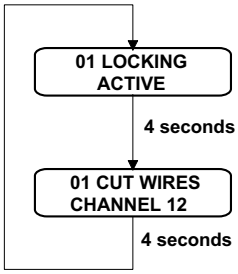

BRIGHTNESS ADJUSTMENT

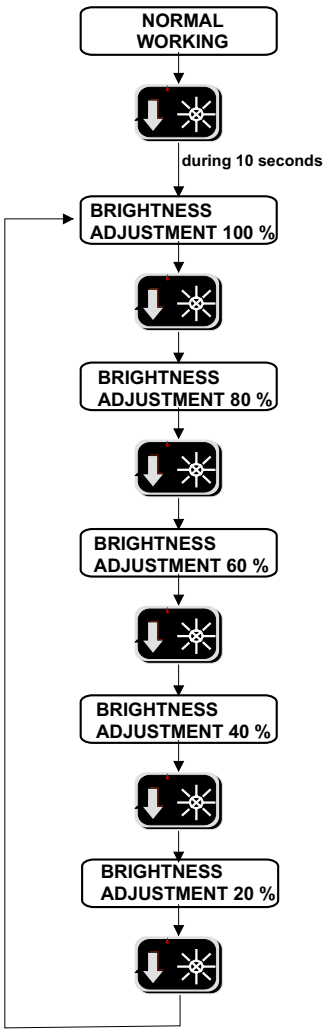

▷ To access brightness adjustment in normal working, press for 10 seconds on the “test leds” button.

➪ The brightness adjustment passes automatically to 100 %.

▷ Each time the “test leds” button is pressed again, the brightness decreases by 20 %. To exit the brightness adjustment, either:
- wait 6s without pressing any buttons, or
- press the “reset” key, or
- press the prog key, or
- activate the “stop blinking” terminal.

➪ Note:
- The front panel “test leds” button and the “test” terminal have the same function as regards brightness adjustment.
- If the “test” and “stop blinking” terminals are common to several panels, you can adjust the brightness for all the panels simultaneously.

CONNECTIONS

Diagram of the theoretical connections of the J3500
Showing the model “input with positive bus” J3500-xx-1x or “input with negative bus” J3500-xx-2x

POSITIVE connection

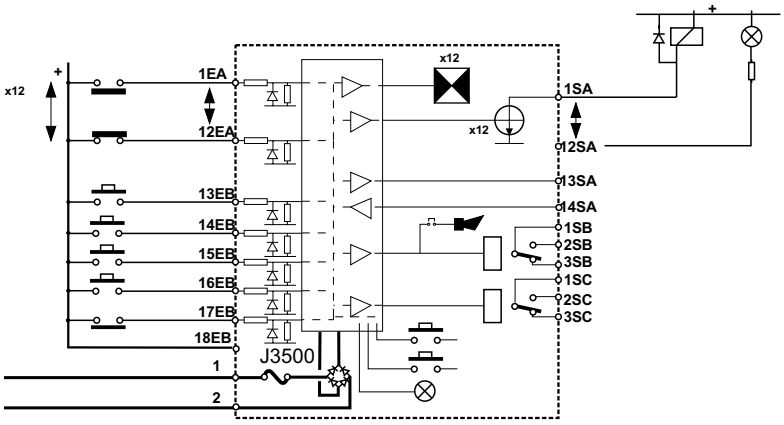

NEGATIVE connection

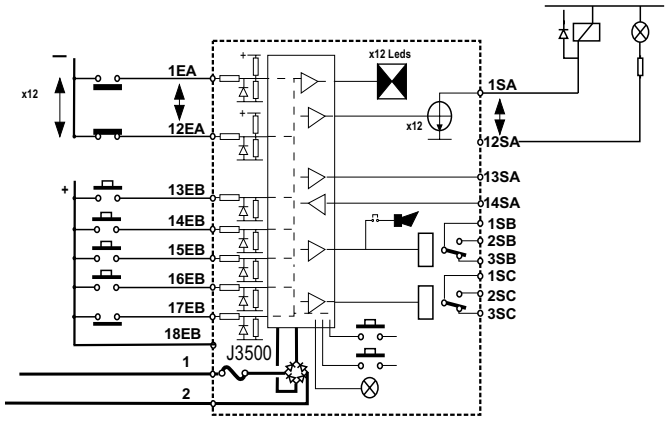

J3500 with negative inputs (J3500-xx-2x)
- The inputs are connected from zero volts
- The auxiliaries (Buttons, Locking) are connected from the “+com”.

Example of possible wiring for the inputs

The J3500 is supplied with “direct current” and “alternative current” on the same device.
The connection of supply terminals 1 and 2 can be crossed.

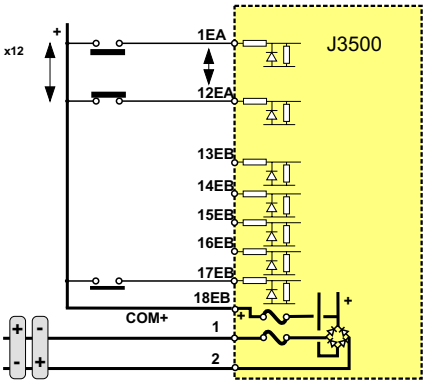

Connection of a panel

Different types of wiring are possible:
-supply to the J3500 by **direct** current or **alternative** current.
-supply to the input contacts: “**dry contact**” (the contacts are supplied from an internal voltage on the “+com”) or “**voltage**” (the contacts are supplied from an external voltage which is generally the supply to the J3500).
The “+com” supply to the contacts is protected by the fuse.

Several wiring solutions are possible. (see the following table)
For specific cases, please consult us.

Supply to the J3500		Inputs	Possible diagrams
Low voltage	**Direct** **24Vdc-48Vdc** **(14Vdc to 65Vdc)**	**Dry contact** **Voltage** **Open collector**	**4-5-6** **1-2-3** **3 + 1-2-3-4-5-6**
	Alternative **24Vac** **(14Vac to 49Vac)**	**Dry contact** **Voltage** **Open collector**	**7-8-9**
High voltage	**Direct** **125Vdc-200Vdc** **(80Vdc to 260Vdc)**	**Dry contact** **Voltage** **Open collector**	**4-5-6**
	Alternative **110Vac-220Vac** **(80Vac to 260Vac)***	**Dry contact** **Voltage** **Open collector**	**7-8-9**

Suggested diagrams according to the table on the preceding page:

With supply “low voltage direct” / inputs in “voltage”

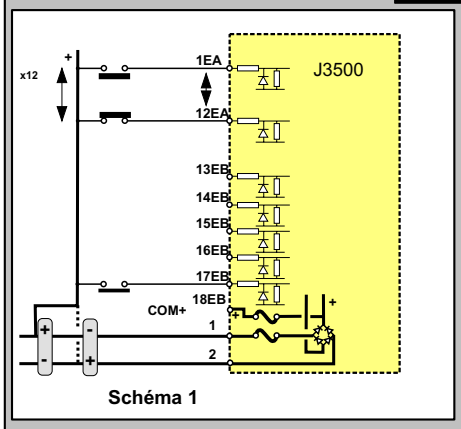

Schéma 1

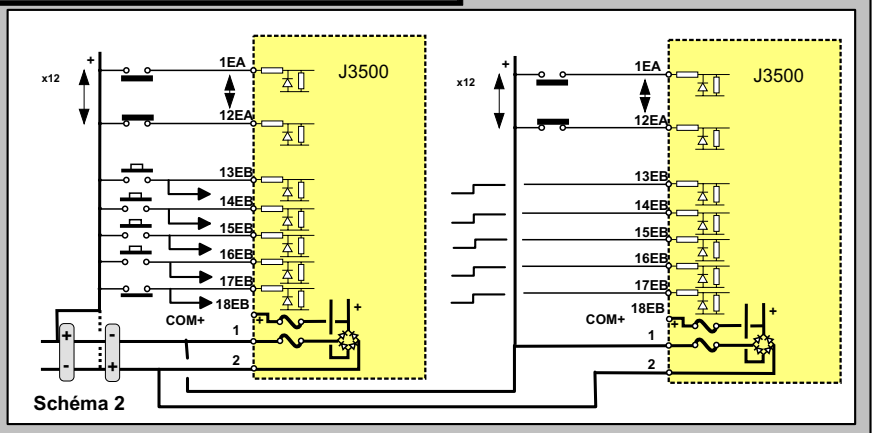

Schéma 2

Wiring for one panel

Wiring for several panels

Diagrams 1 and 2 :
Supply by direct current and Input in **“voltage”**. (The contacts are supplied with the same voltage as that of the device and with the positive polarity arriving to terminal 1 or 2.) The supply to the contacts is not protected. This diagram allows the connection of a large number of panels mounted in a battery system, with a common power supply for the input contacts.
The “+com” button is not used.

Wiring for several panels

Diagram 3 : variation: the centralised external buttons (terminals 13 EB to 17EB) are supplied by the “+com” button. The +Com terminal can supply up to external buttons of 5 panels maximum.

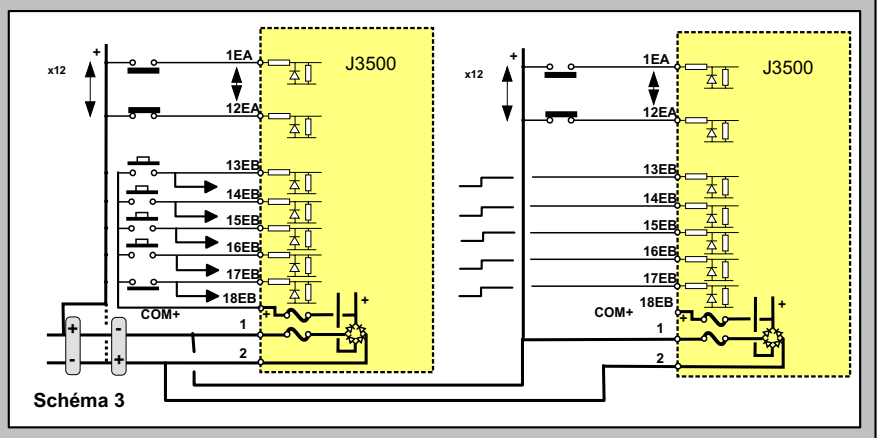

Schéma 3

With “low voltage” or “high voltage” supply / Inputs in “dry contact”

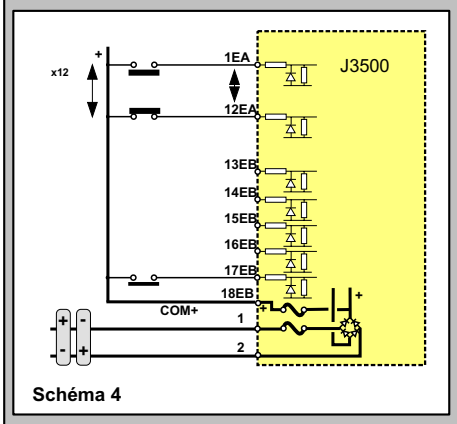

Schéma 4

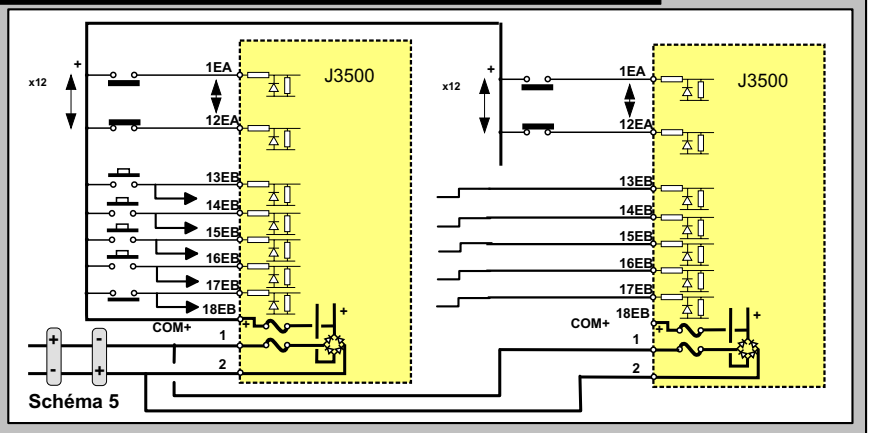

Schéma 5

Wiring for several panels

Wiring for one panel

Diagrams 4 and 5 :
-power supply in direct current and Inputs in **“dry contact”**: (the contacts are supplied via an internal voltage on the “+com”.)
The power supply to the contacts is protected by the fuse.
The +Com terminal can only supply the inputs of 2 panels maximum.

Wiring for many panels

Diagram 6 :
Each “+Com” of each panel supplies its own contacts.
The centralised external buttons (terminals 13 EB to 17EB) are supplied by the “+Com” of one of the panels.
The +Com terminal can supply up to external buttons of 5 panels maximum.

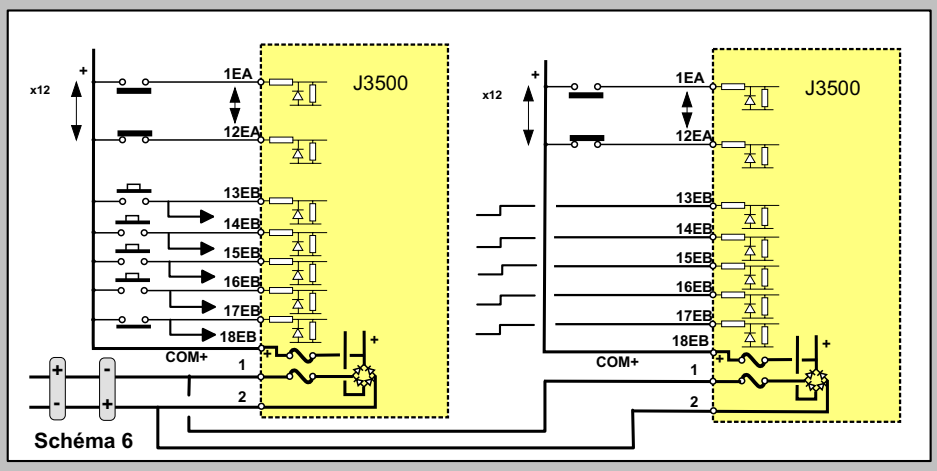

Schéma 6

Suggested diagrams according to the table on the preceding page:

With “low voltage” or “high voltage” alternative current supply / Inputs in “dry contact”

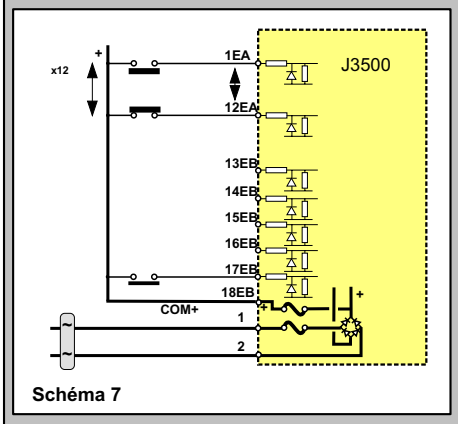

Schéma 7

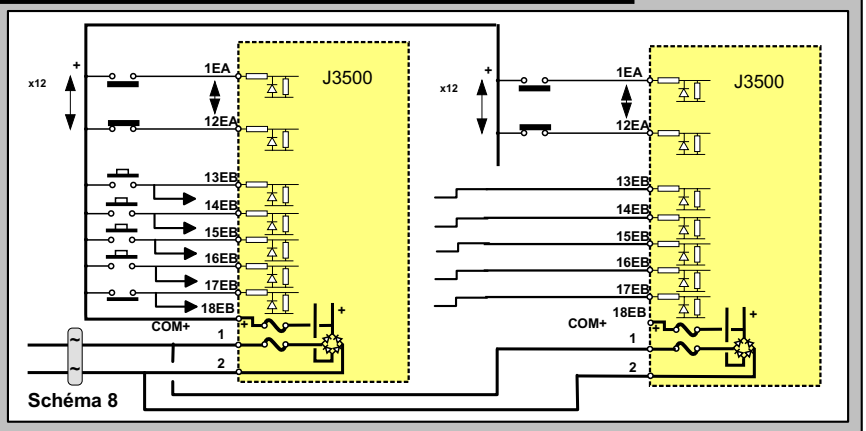

Schéma 8

Wiring for one panel

Wiring for several panels

Diagrams 7 and 8 :
-Supply by alternative current and Inputs in “dry contact”: (the contacts are supplied by an internal voltage on the “+com”.)
The power supply to the contacts is protected by the fuse.The +Com terminal can only supply the inputs of 2 panels maximum.

Wiring for many panels

Diagram 9 :
Each “+Com” of each panel supplies its own contacts.
The centralised external buttons (terminals 13 to 17EB) are supplied by the “+Com” of one of the panels.The +Com terminal can supply up to external buttons of 5 panels maximum.

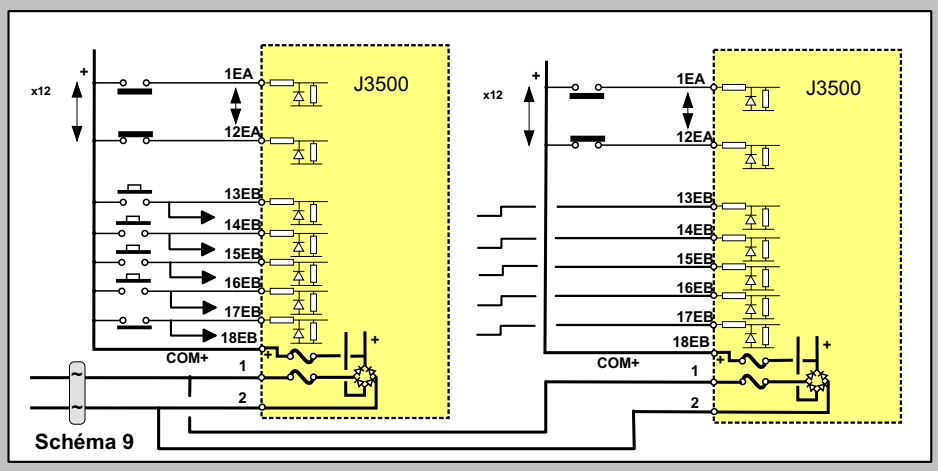

Schéma 9

With “low voltage” direct current supply / Inputs in “open collectors”

Diagram 10 : with supply by direct current with **“open collector”** on the inputs.
A back-up resistance is necessary to the “+”.
A return supply to the “-“ should be provided.
The supply to the inputs is not protected.
The NO type input is validated when the “open collector” is inhibiting.
The NC type input is validated when the “open collector” is passing.

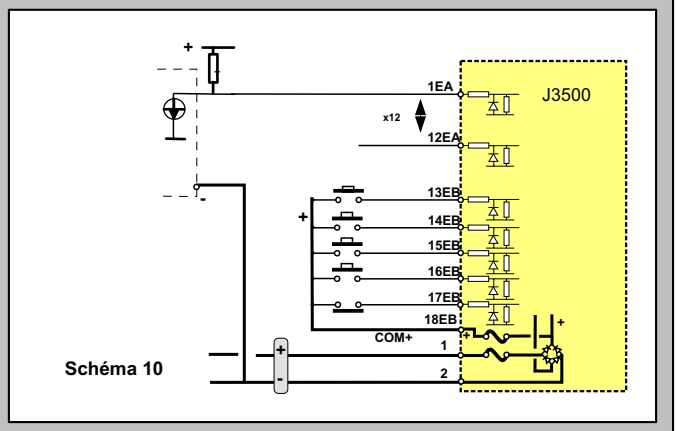

Schéma 10

Example of possible wiring for outputs:

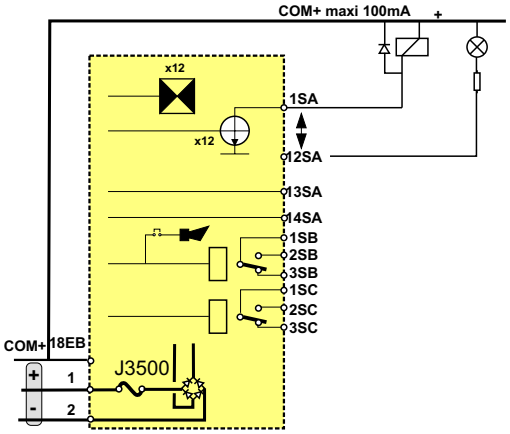

The J3500 standard has the following:
-12 “open collector outputs, 150mA each, max voltage 65Vdc
-1 “1st fault” input / output
-1 “Synchronisation” input / output
-1 “audible alarm” relay with 1 changeover contact, potential free, (dry contact) with galvanic insulation
-1 “general alarm” or synthesis relay with 1 changeover contact, potential free, (dry contact) with galvanic insulation

If used with direct outputs:
The external receiver should be connected to the “+com”.
-with external relay: In certain cases, it is advisable to protect oneself from extra currents of break and from switching currents. (A relay coil used in direct current has a switching current that is much higher than the retaining current.)
-with a filament type indicator light: a filament that is off has a very low resistance (short-circuit). The value of the ohms will not increase until it has been switched on for a certain length of time. It is therefore necessary to add a low resistance in series to avoid destroying the open

There is a range of cards allowing you to connect directly to the J3500.
-M090x-02-0x, Relay card, galvanic insulation
The M090x-02xx is an output interface with galvanic insulation of 12 or 14 relays type 1RT. It allows you to maintain the outputs in the “open collector” state and to double them with a dry 1RT contact (12 for the outputs + 1 for the synchro + 1 for the 1st fault). The 2 attached relays can be used differently, for example: doubling 2 relays out of 12. The card is supplied directly by the J3500.

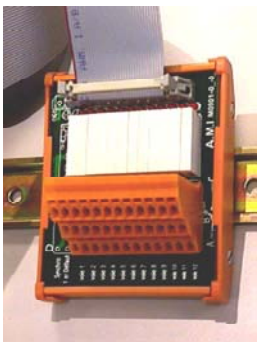

-M090x-02-2x, Relay card, galvanic insulation
Equipped with 1 or 2 relays with selectors, this allows you to sort the channels in two directions:
(electrician / mechanic
or high risk alarm / ordinary alarm).

See the “Accessories for the J3500” document.

APPLICATION EXAMPLE:

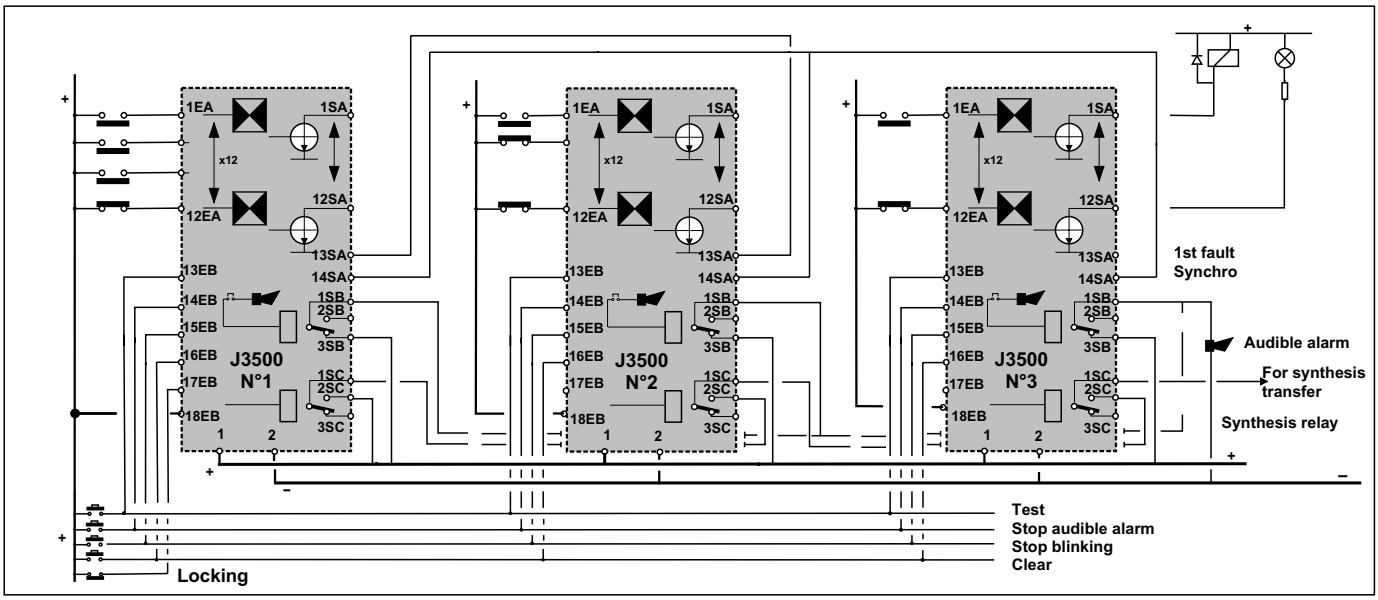

Application example:
- Panel 1 is equipped with 3 NO contacts and 1 NC contact on the inputs (Parameters: inputs 1 to 3 in NO, input 12 in NC).
- Panel 2 is equipped with 1 NO contact and 2 NC contacts on the inputs (Parameters: input 1 in NO, inputs 11 and 12 in NC)
- Panel 3 is equipped with 1 NO contact and 1 NC contact on the inputs (Parameters: input 1 in NO, input 12 in NC)
- The “test”, “Stop audible alarm”, “Stop blinking” and “Clear” functions are centralised for the 3 panels.
- A remote transfer and an audible alarm are connected to the whole system.
- The audible alarm relay is used in positive safety.
- The synthesis relay is Normally active (watchdog mode)
- The blinking on the 3 panels is synchronised (“1” and “2” are set on receiver, “3” on transmitter. “3” synchronises “1” and “2”.)
- “1” and “2” are grouped together to obtain the 1st fault out of the 24 inputs.
- “3” uses its direct outputs to switch on an external relay and light. (terminals SA1 and SA12)
- “3” uses its outputs on an external relay and light.
A diode and a resistance have been mounted as a protection.

MECHANICS / DIMENSIONS

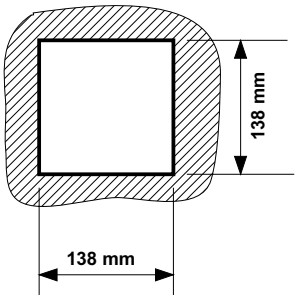

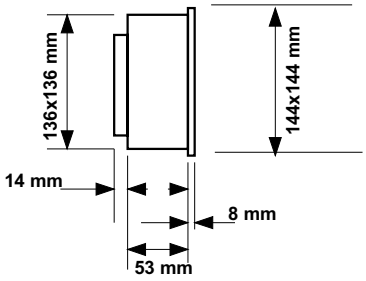

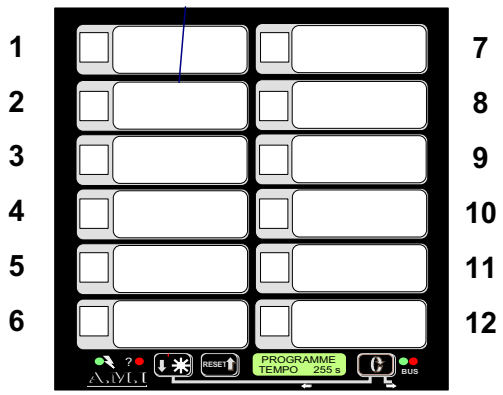

Channel numbering
Front view

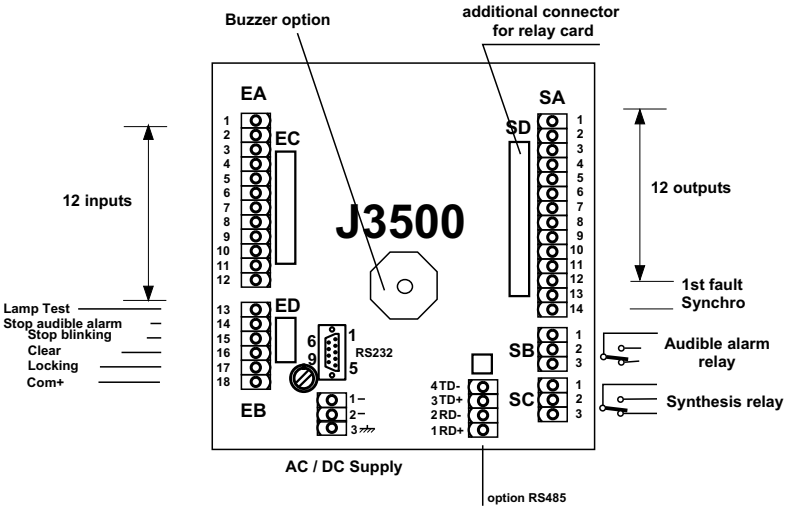

Rear view

TECHNICAL FEATURES

- Delivered in standard model with red leds (for different colours, see below)
- Mixed supply voltage:
  14Vdc-65Vdc and 14Vac 49Vac
  80V-260Vac/dc supply
- Open collector outputs: depending on supply voltage 24Vdc (see output interface)
- “+Com” terminal, max capacity: 100mA
- Max output capacity: 150mA
- Input consumption: 2.4mA
- Line resistance allowed on the contact: 2Kohms
- Precision on delay time: +/-20 %
- Discrimination between 1st and 2nd fault: 5ms
- Max consumption: 500mA with 24Vdc
- Min consumption: 100mA with 24Vdc
- Temperature: -10 / +50°C (with nominal tension)
- Relay contact: 1RT 8A/250Vac
- Weight:750g
- Dimensions: 144x144x65
- Protection without cover: IP22
- Protection with cover IP54

Rapid start-up

1/ Connect the power supply (terminals 1 and 2)

2/ Connect the inputs (external contacts should be connected to +COM)

3/ Connect the “audible alarm” contact

4/ If yor inputs are NO, the device is ready to use. You can turn it on.

5/ Should you wish to define the input parameters:
Example:
E1 Contact NC, 1min, the other channels in standard.

Prog for 10s, Display code, **Reset**, display 1, **Prog**, display input, **Prog**, display Input 1, **Prog**, display NO, **Reset**, display NC, **Prog**, display delay time, **Reset**, display hours, **Prog**, select minutes, **Reset**, put minutes to 1 minn **Prog**, display seconds, **Prog**, display ms, **Prog** until users configurations are displayed, **Prog**, display return to normal working, **Reset**, display yes, **Prog**.

The following points should be noted:
-when modifying a parameter, the modification is saved on passing to the next programme. (Which means that if you wait to long, the J3500 will return to “normal working” without saving the modification.)
-if you cannot enter the programme mode, your panel may be on alarm (flashing at front) with audible alarm activated. You must release to be able to access the settings menu.

3, rue de la Garenne - Z.I. de Vernon
F 27950 SAINT-MARCEL - FRANCE
Tél. : +33 (0) 2 32 51 47 16 - Fax : +33 (0) 2 32 21 13 73
http://www.ami-control.com
✉ : contact@ami-control.com